YAMAHA

SERVICE MANUAL

e-Bike SYSTEMS

X94 Series

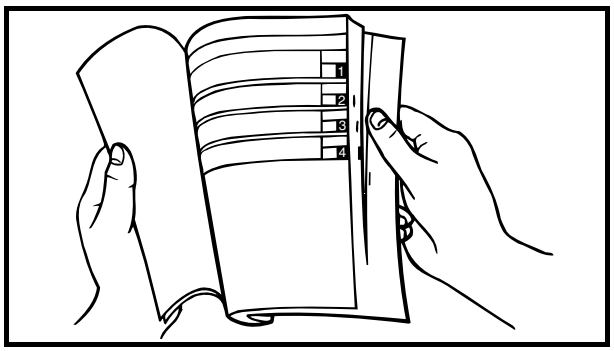

How to Use This Manual

Searching for Manual Contents

1. This manual is divided into four parts: General information, electrical components, Drive Unit, and service data.
2. The table of contents is provided at the beginning of the manual. Review the overall makeup of the manual and search for the chapters and sections you need.

Symbols

Important items in this manual are indicated by the following symbols:

The symbols indicate precautions pertaining to safety.

WARNING **Indicates that incorrect use could result in death or serious injury.**

NOTICE **Indicates that incorrect use could cause property damage.**

TIP **Indicates methods are correct operation or main elements of inspection and maintenance.**

Symbols indicate the following meanings or items:

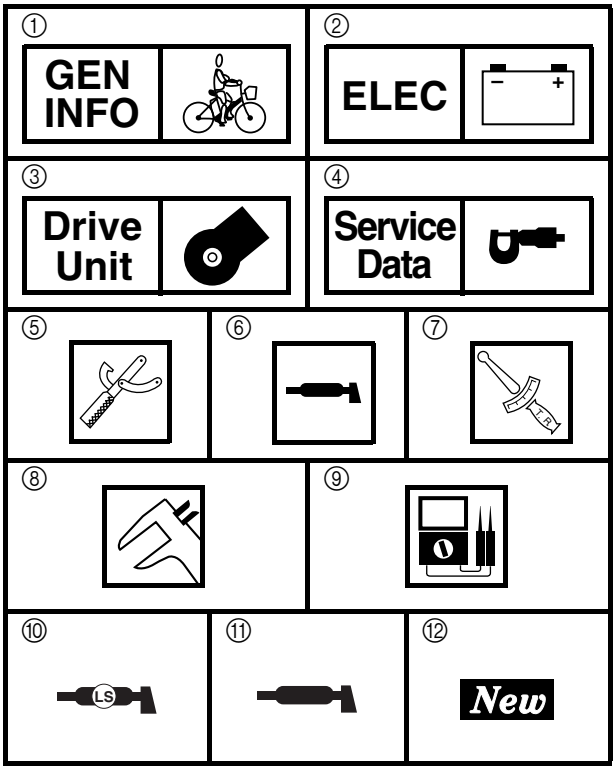

① General information section
② Electrical Components section
③ Drive Unit section
④ Service data section

⑤ Special tools
⑥ Types of grease
⑦ Tightening torque
⑧ Standard values or limits of use
⑨ Standard values for resistance (Ω), voltage (V), current (A)
⑩ Lithium-soap-based grease
⑪ Lithium grease made from synthetic hydrocarbon oil and synthetic ester oil (MULTEMP AC-N®)
⑫ New parts to be used when replacing

Index

General Information — GEN INFO 1

Electrical Components — ELEC 2

Drive Unit — Drive Unit 3

Service Data — Service Data 4

CONTENTS

CHAPTER 1 General Information

Description **P1-1**

Precautions relating to maintenance (1) **P1-2**

Cleaning and Maintenance P1-2
Keep away from fire P1-2
Proper tools P1-2
Replacement parts P1-3
Precautions for disassembly and reassembly P1-3
Handling the Battery Pack P1-4

Servicing Precautions (2) **P1-5**

Bearing Installation P1-5
Oil Seal Installation P1-5
Circlip Installation P1-5

Precautions relating to maintenance (3) **P1-6**

Handling of the torque sensor P1-6

Specialized tools and equipment **P1-7**

CHAPTER 2 Electrical Components

Electrical component wiring diagram **P2-1**

Battery pack **P2-2**

Battery pack display function P2-2
Error display P2-2
How to check the total number of battery charging cycles P2-4
How to check the absolute battery capacity P2-5

Charging **P2-6**

e-kit system dedicated battery charger P2-6
Display on battery capacity indicator lamps while charging P2-7

Diagnosis mode **P2-8**

Recoverable errors of battery pack or battery charger P2-8
Non-recoverable errors of battery pack P2-11
Temperature protection function P2-14
Over-discharge protection function P2-15

Diagnosis function (LED type display unit) **P2-17**

Display unit's display when there is an error P2-17
Operating Procedures to Diagnosis Mode P2-19

Diagnosis function (LCD type display unit) **P2-28**

Display unit's display when there is an error P2-28
Operating Procedures to Diagnosis Mode P2-30

Diagnosis function P2-39
Speed sensor set P2-45
Speed sensor inspection P2-45

CHAPTER 3 Drive Unit

Drive axle, Motor P3-1
Checking the Drive Sprocket (Only for rear derailleur model) P3-5
Removal of the Controller Assembly P3-5
Removal of the Torque sensor assembly and Drive axle. P3-7
Installation of the Drive axle and Controller assembly P3-7
Installation of the Controller assembly P3-7
Installation of the Bearing Housing P3-9
Installation of the Stator Cover P3-10

CHAPTER 4 Service Data

Tightening Torque P4-1
Other, general tightening torques P4-1
Lubricants, areas to apply sealant and specified types P4-1
Cable, Wire, and Pipe routing diagram P4-2
Troubleshooting P4-3

General Information

Description

1

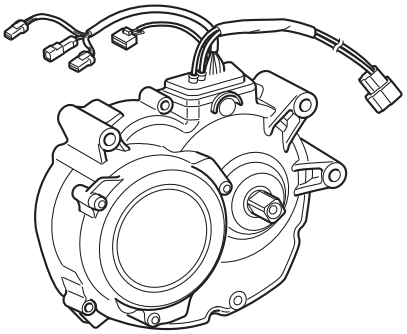

2

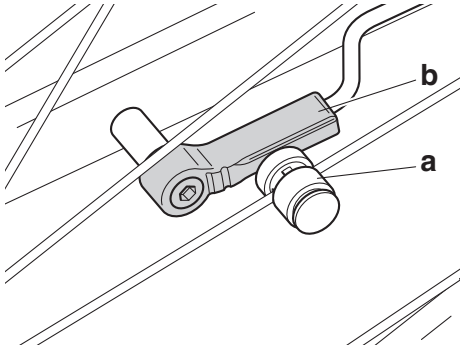

3

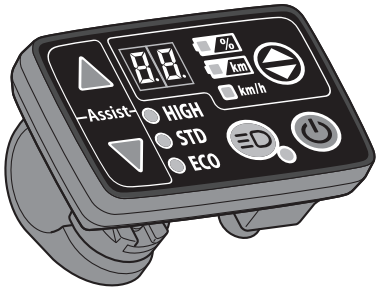

4

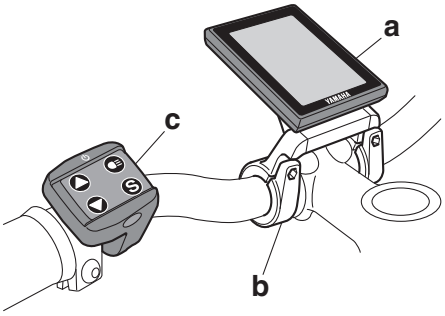

5

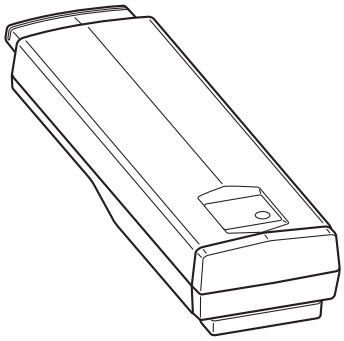

6

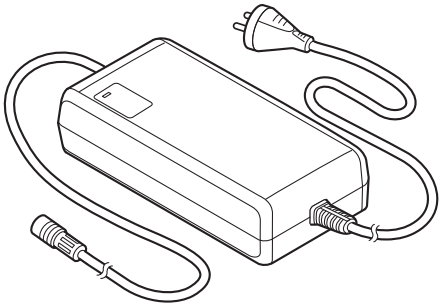

1. Drive Unit
2. Speed sensor set
   a) Magnet sensor spoke type
   b) Pick up
3. Display Unit (LED type)
4. Display Unit (LCD type)
   a) Display (detachable)
   b) Display holder
   c) Switch
5. Battery pack
6. Battery charger

Precautions relating to maintenance (1)

Cleaning and Maintenance

NOTICE

When washing the bicycle, keep water away from the e-bike system.
Water which comes in direct contact with the e-bike system can get inside and reduce performance. Steam cleaning is particularly to be avoided.

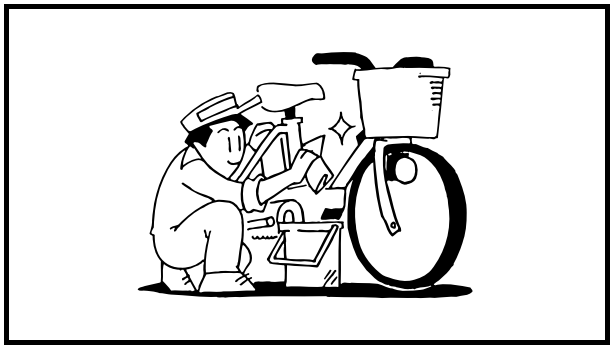

1. Remove any mud or dust from the frame and Drive Unit to make sure that it does not get inside when performing service.
2. Use water or neutral cleanser to clean covers, and wipe off water using a soft cloth to prevent scratching. Avoid wiping with a dry cloth prior to washing.

Keep away from fire
Keep the workplace away from open fire.

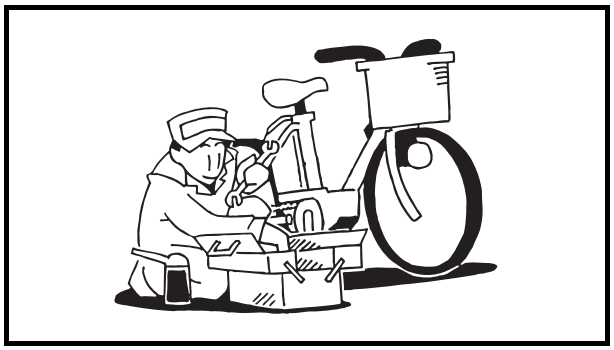

Proper tools
When servicing the bicycle, be sure to use the special tools intended for areas which require special tools in order to prevent damage to parts. Also, work appropriate work should be done using appropriate tools and measuring devices. (Avoid using spanner wrenches. Use offset or box wrenches instead.)

Precautions relating to maintenance (1)

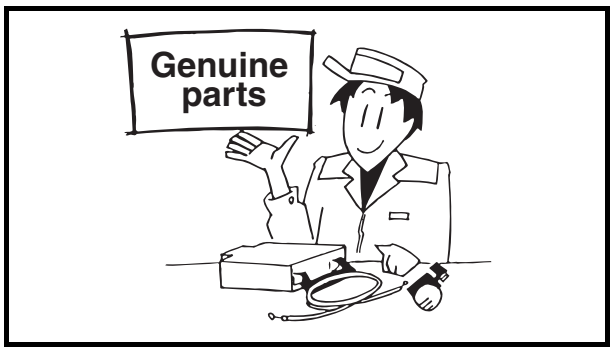

Replacement parts

Replace gaskets (packing), O-rings, cotter pins, circlips (split rings), lock washers, etc. with new parts.

Be sure to use genuine new Yamaha parts and recommended parts for oils and greases, including periodic replacement parts and repair parts.

Do not use used parts because, even though these parts may appear to be the same, they may not be genuine parts, or there is the risk that their quality has changed due to previous use.

Precautions for disassembly and reassembly

1. Inspect and measure parts as needed during disassembly. Keep good records which you can refer to when reassembling parts.
2. Organize parts by sections so that you do not mix them up or lose them.
3. Use cleaning oil to clean Drive Unit parts after disassembly and blow parts clean with compressed air.
4. Reassemble parts while checking any corrections made to parts and referring to the data collected prior to disassembly.
5. While reassembling parts make sure that each part is clean and free of foreign material.
6. Perform reassembly while checking the actions to be performed for each section.
7. Apply oil to sliding parts.
8. Tighten all nuts and bolts to their specified torque.
9. Maintain good communications when the work is done by 2 service personnel.

Handling the Battery Pack

1. Use the dedicated battery charger for charging the battery pack.
2. The battery pack is a dedicated e-bike system battery. If it is connected to a product other than the e-bike system, it will cause a fluid leakage, “overheating, or breakage.”
3. Be sure to charge the e-bike system before operating it for the first time or after it has been unused for a long period of time.
4. Do not expose the battery pack to fresh water or seawater. It can cause the battery pack to overheat or rust.
5. Do not disassemble or modify the battery pack. It can cause a fluid leakage, overheating, or breakage. To replace the battery pack, replace the entire assembly.
6. If charging is not completed even after the specified charging time has elapsed, stop charging. If charging is continued, it can cause a fluid leakage, overheating, or breakage.
7. The battery pack should be sorted for environmental-friendly recycling. Do not dispose of the battery pack as household waste.

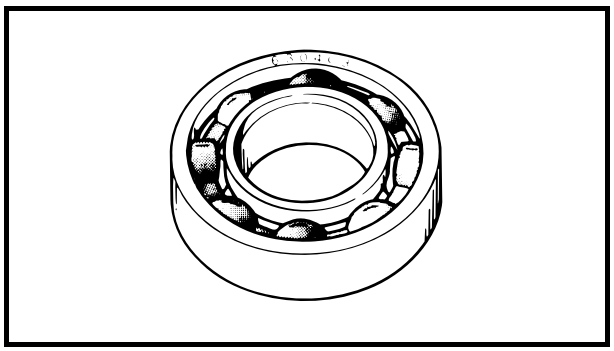

Servicing Precautions (2)

Bearing Installation

1. When installing a bearing, the surface with the manufacturer's mark and the size code should face outward.

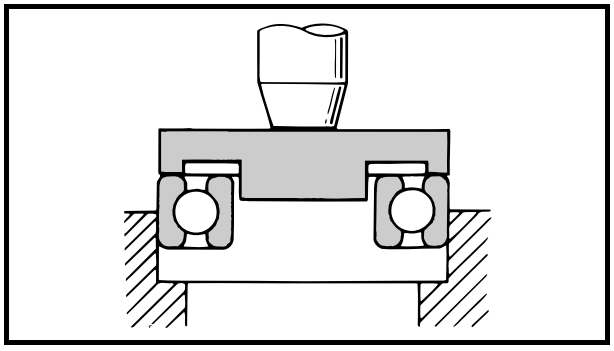

2. When striking a bearing into the case, apply a parallel force to the outer race.

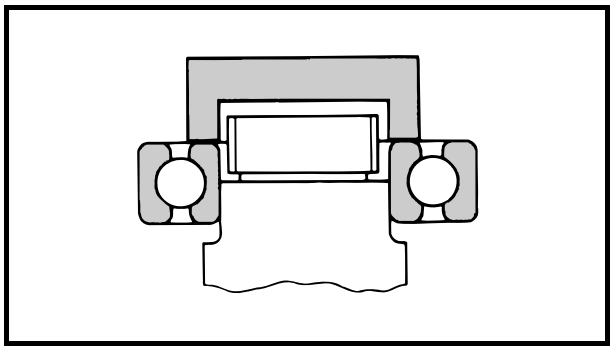

3. When striking a bearing onto an axle, apply a parallel force to the inner race.

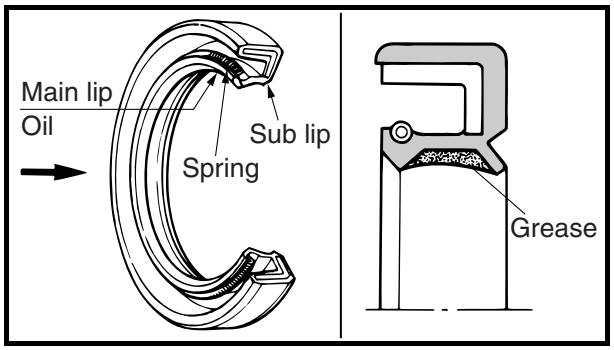

Oil Seal Installation

1. To install an oil seal, direct the main lip towards the oil chamber (the object of sealing).
2. Be sure to apply a thin, even coat of grease to the sealing lip before installing the oil seal.

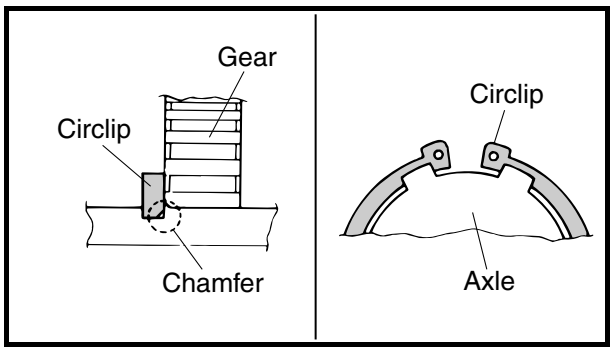

Circlip Installation

1. To install a circlip, direct the chamfered side of the circlip inward.
2. Install the circlip by aligning its opening with the center of the spline.
3. Do not expand the circlip more than necessary.

Precautions relating to maintenance (3)

Handling of the torque sensor

1. Keep away from magnets.
   Do not use magnetized screwdrivers or perform maintenance near large sources of electric power.

2. Avoid strong mechanical impact.
   Torque sensors which have been dropped or which have been removed through the use of a hammer or the like cannot be used because the torque sensor reference voltage can change significantly due to variations in the internal magnetic circuits.

3. Do not crush or press in the axial direction.
   Any deformation of the torque sensor case by crushing can result in changes in the torque sensor reference voltage. Torque sensor reference voltage changes can also be caused by the application of a force of over 2 kgf on the sensor shaft while the case is clamped in place.
   The installation of a one-way clutch having a tightly-fitted spline can apply excessive force to the sensor shaft and result in voltage changes.

4. Do not pull leads.
   Do not pull forcefully on the small circuit board leads which connect the torque sensor body to the torque sensor. It can change the torque sensor reference voltage.

5. Do not allow water to come in contact with the Drive Unit.
   Any rust on the sensor shaft or the main axle can cause output fluctuations or can reduce the strength of the parts. Do not perform servicing on the sensor in wet locations.

6. Organic solvents
   Do not apply gasoline or solvent-based lubricants (consumer spray-type lubricants) to the sensor shaft or the circuit board. It can reduce the unit's ability to prevent short-circuits.

7. Do not reuse damaged drive axles.
   The sensor shaft and the drive axle slide in a metal bearing. It will be difficult to install the one-way clutch and the sensor shaft if there are scratches on the surface of the drive axle.

8. Do not disassemble the torque sensor.
   Do not disassemble the interior of the sensor because the torque sensor cannot be readjusted. Torque sensors that have been disassembled cannot be used.

Specialized tools and equipment

The appropriate specialized tools must be used for inspection, adjustment, disassembly, and reassembly.
Maintenance problems and mechanical breakage can be prevented by using the appropriate specialized tools.

Lithium soap based grease

All-purpose type grease with excellent water and heat resistance

MULTEMP AC-N®

Lithium grease made from synthetic hydrocarbon oil and synthetic ester oil

Three Bond No.1215®

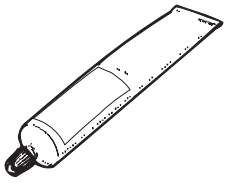

Digital circuit tester

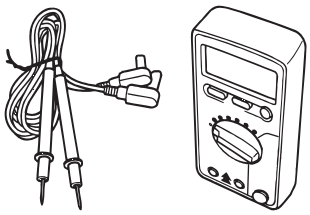

Device used for testing and measuring electrical components

Electrical Components

Electrical component wiring diagram

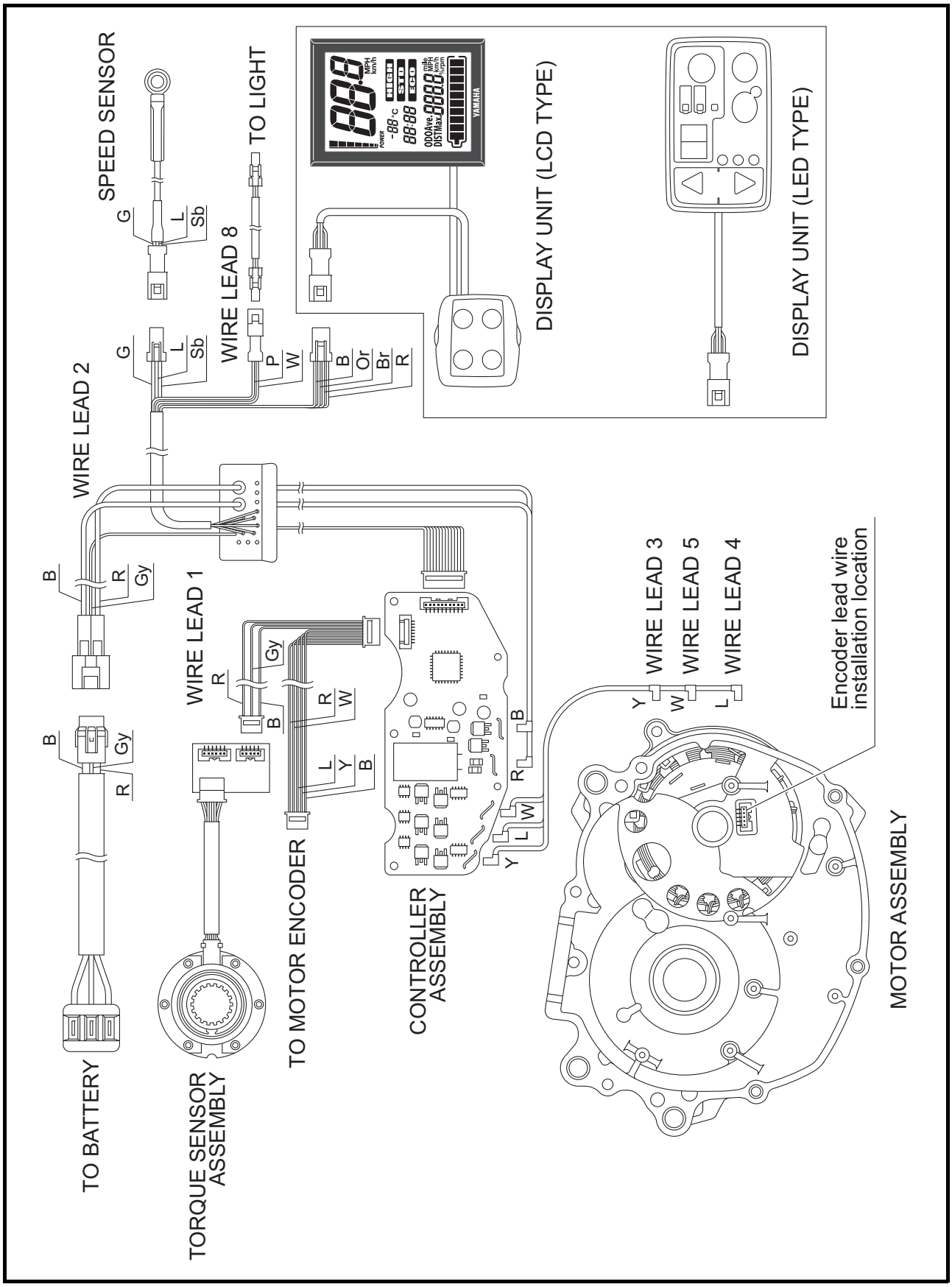

Battery pack

Battery pack display function

By holding down the battery capacity indicator button "(☝)" on the battery pack, the following items can be checked.

Length of time that the button is pushed	Display item	Display time	Details	Page
When pushed	Normal state: Residual battery capacity	5 seconds	See the owner's manual.	–
	Error detected: Error display	5 seconds	See "Error display".	P. 2-2
20 seconds	Total number of battery charging cycle	5 seconds	See "How to check the total number of battery charging cycle".	P. 2-4
30 seconds	Absolute battery capacity	5 seconds	See "How to check the absolute battery capacity".	P. 2-5

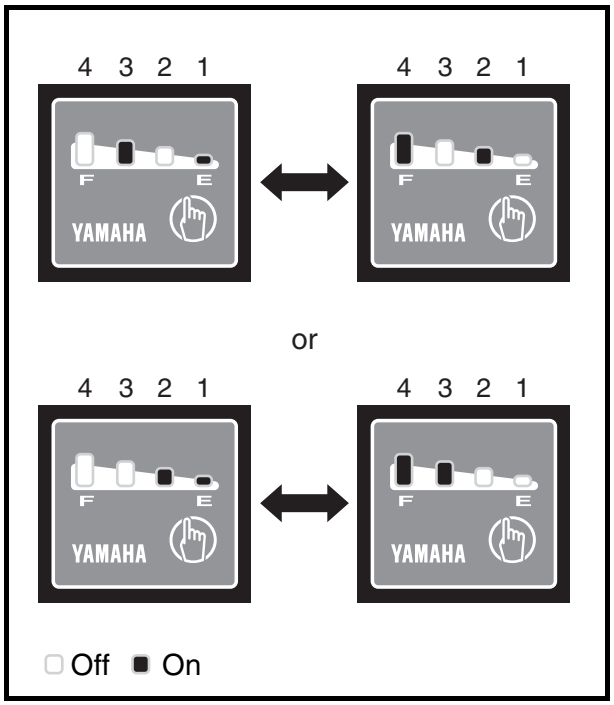

Error display

1. If the battery capacity indicator lamps [1]/[3] and [2]/[4] turn on alternately, or the lamps [1]/[2] and [3]/[4] turn on alternately when the battery capacity indicator button "(☝)" is pushed or connect the battery charger, see "Recoverable errors of battery pack or battery charger".
   (P. 2-8)

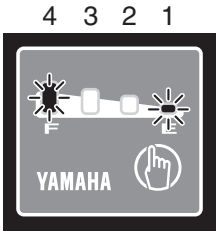

Off Fast flashing

2. If the battery capacity indicator lamps [1] and [4] are fast flash simultaneously when the battery capacity indicator button "" is pushed or connect the battery charger, see "Non-recoverable errors of battery pack". (P. 2-10)

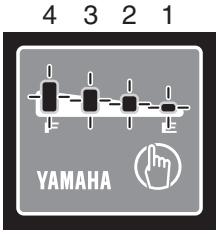

Slow flashing

3. If all four battery capacity indicator lamps flash slowly at the same time **when the battery capacity indicator button "" is pushed**, see "Temperature protection function". (P. 2-13)

   If all four battery capacity indicator lamps flash slowly at the same time **when connect the battery charger**, see "Charging on stand-by mode". (P. 2-7)

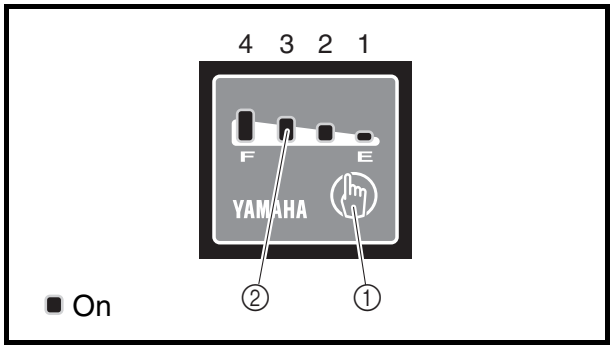

How to check the total number of battery charging cycles

Check the total number of battery charging cycles as follows:

1. Hold down the battery capacity indicator button "(☝)" ① for 20 seconds.
2. The total number of battery charging cycles is indicated by the four battery capacity indicator lamps ② on the battery pack.

TIP

While holding down the battery capacity indicator button "(☝)" for 20 seconds, the lamps will display the currently applicable condition (residual battery capacity, * error diagnosis), for five seconds for each condition.

*The error diagnosis are displayed only for a malfunction, and is not displayed in normal state.

The table below indicates the relationship between the total number of battery charging cycles and the battery capacity indicator lamps.

Display of the total number of battery charging cycles

battery capacity indicator lamps on battery pack	The total number of battery charging cycles
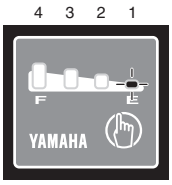	0 to 100 times
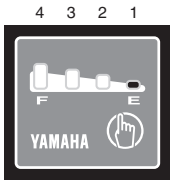	101 to 200 times
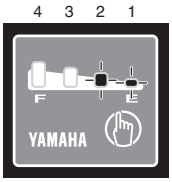	201 to 300 times
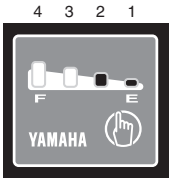	301 to 400 times

battery capacity indicator lamps on battery pack	The total number of battery charging cycles
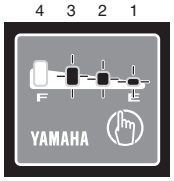	401 to 500 times
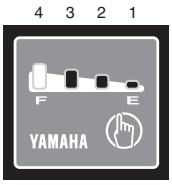	501 to 600 times
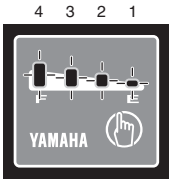	601 to 700 times
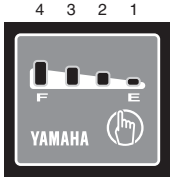	701 times or more

□ Off ■ On -■- Slow flashing

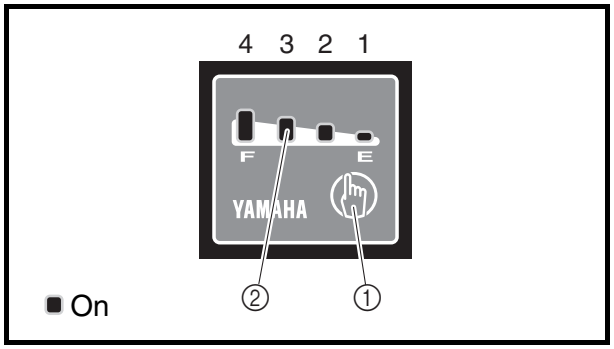

How to check the absolute battery capacity

Check the *1 absolute battery capacity as follows:

1. Hold down the battery capacity indicator button "(hand)" ① for 30 seconds.
2. The *1 absolute battery capacity is indicated by the four battery capacity indicator lamps ② on the battery pack.

TIP

While holding down the battery capacity indicator button "(hand)" for 30 seconds, the lamps will display the currently applicable conditions (residual battery capacity, *2 error diagnosis, Total number of battery charging cycles), for five seconds for each condition.

*1 Absolute battery capacity:
Absolute battery capacity is not the relative specified electric power capacity that the battery pack has at any given point, but the actual electric capacity that the battery pack itself can store. The capacity at the time of shipment is considered 100%.

*2 The error diagnosis are displayed only during a malfunction, and is not displayed in normal state.

The table below indicates the relationship between the absolute battery capacity and the battery capacity indicator lamps.

Display of the absolute battery capacity

battery capacity indicator lamps on battery pack	Absolute battery capacity (%)
4 3 2 1 F E YAMAHA	0 to 24%
4 3 2 1 F E YAMAHA	25 to 49%

battery capacity indicator lamps on battery pack	Absolute battery capacity (%)
4 3 2 1 F E YAMAHA	50 to 74%
4 3 2 1 F E YAMAHA	75 to 100%

□ Off ■ On

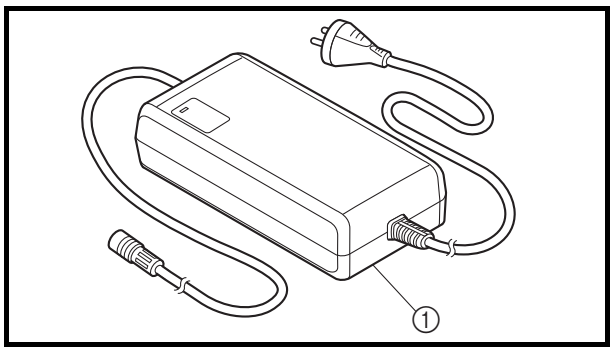

Charging

e-kit system dedicated battery charger

This battery charger ① is a dedicated battery charger for the e-kit system's battery pack.

Example of display on battery capacity display lamps on the battery pack while charging

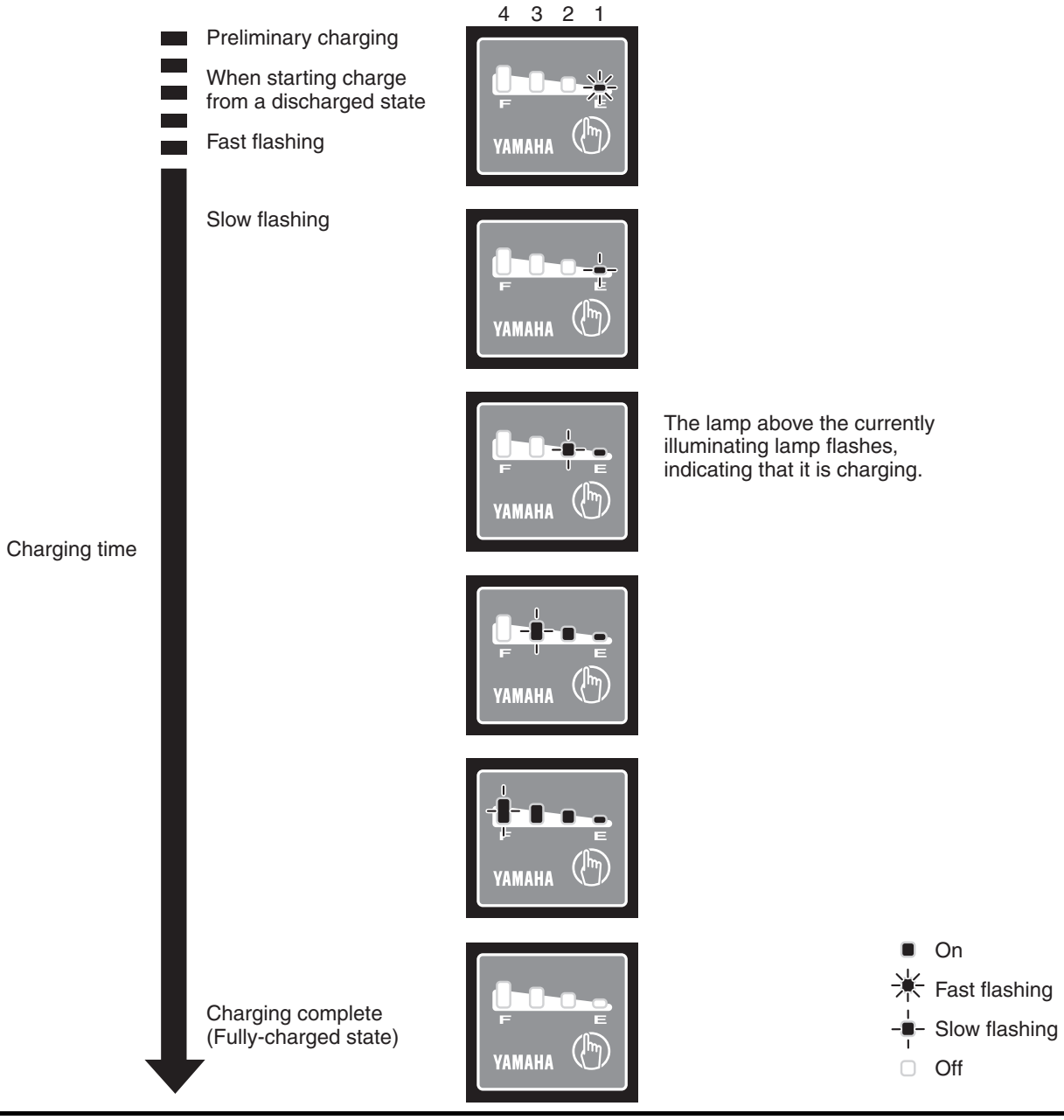

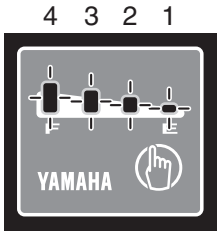

Slow flashing

Display on battery capacity indicator lamps while charging

Some phenomena such as the following may occur while charging the battery pack, depending on the battery pack's state; however, these are not malfunctions.

1. Charging on stand-by
   Display on the battery capacity indicator lamps on the battery pack: [All four lamps flashing slowly at the same time].
   When the battery pack's internal temperature goes out of operating range, the battery pack changes to the "Charging on stand-by" state automatically.

TIP

- Once the temperature inside the battery pack becomes suitable for charging, the charging starts automatically.
  (In such case, the charging time becomes longer by the time during which all four battery capacity indicator lamps on the battery pack were flashing simultaneously.)
  As much as possible, charge at an optimal room temperature, approximately 15 to 25°C.
- Even if you start charging properly, if the battery pack exceeds the specified temperature range while charging, the charging process is aborted to protect the battery pack. This may result in insufficient charging. In such case, when checking the residual battery capacity, not all of the four battery capacity indicator lamps on the battery pack may not turn on. Cool down the battery pack for a while, and charge again, preferably in a cool place.
- Even if the room temperature is within the 0 to 45°C range, if attempting to charge the battery pack immediately after driving, or if the battery pack had been left in the sun during summer, the battery pack's internal temperature may be outside the allowable temperature range for charging. If the room temperature is 30°C, it may take approximately 4 hours until the battery pack's internal temperature is within the allowable temperature range for charging.

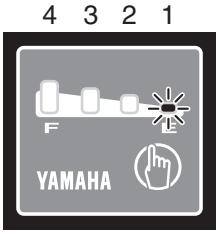

Off Fast flashing

2. During pre-charging
   Display on the battery capacity indicator lamps on the battery pack: [Battery capacity indicator lamps [1] flash rapidly].

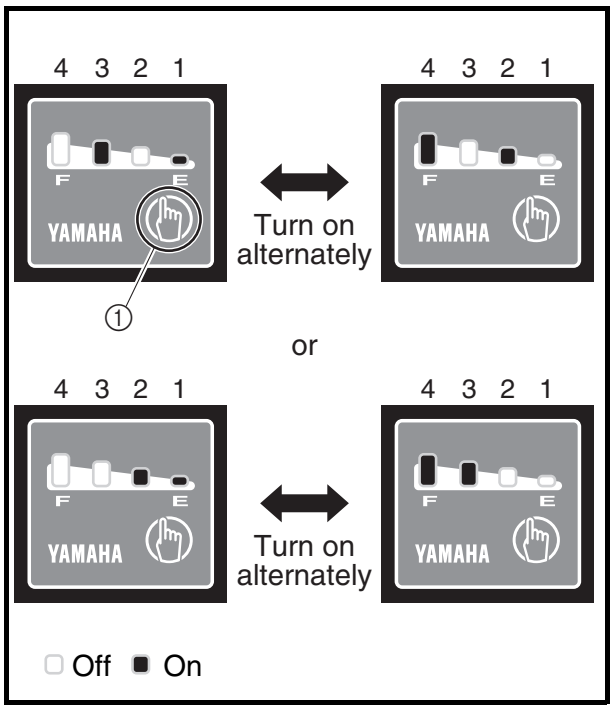

Diagnosis mode

Recoverable errors of battery pack or battery charger

If the battery pack or battery charger has the errors, the following procedure can be used to access the error diagnosis mode and confirm the details regarding the error of the battery pack or battery charger.

1. If there is an error when the battery capacity indicator button "(☝)" ① on the battery pack is pushed or connect the battery charger, the battery capacity indicator lamps [1]/[3] and [2]/[4] turn on alternately, or the lamps [1]/[2] and [3]/[4] turn on alternately.
   When the battery capacity indicator lamps turn on alternately, the residual battery capacity is not displayed.
2. Hold down the battery capacity indicator button "(☝)" ① for 10 seconds.
3. The lighting display of the battery capacity indicator lamps indicates the error of the battery pack or battery charger.

TIP

- If the battery pack or battery charger is operating normally, the battery capacity indicator lamps indicate the residual battery capacity.
- If there are multiple errors, only the latest error will be displayed.
- The error diagnosis mode can be accessed whether the battery charger is connected or disconnected.

List of battery pack/battery charger diagnosis items

□ Off ■ On

Battery capacity indicator lamps		Battery capacity indicator lamps	Fault device	Failure	Action
1/3 and 2/4 turn on alternately	Hold down the battery capacity indicator button "⊕" for 10 seconds	4 3 2 1	Battery pack failure	Overcharging during discharging	1. Connect the battery pack to the dedicated battery charger for the e-kit system and charge it for a while. 2. The battery pack returns to the normal state after the step 1, install the battery pack to the bicycle and ride it for a while. 3. If the battery pack error occurs again, perform the following: • Check the Drive Unit failure. • Replace the battery pack.
		4 3 2 1		Charging over current during discharging	
		4 3 2 1		Discharging over current	
		4 3 2 1		Short circuit	
		4 3 2 1		FET temperature fault	

1/2 and 3/4 turn on alternately 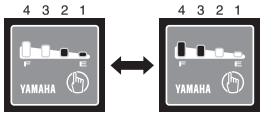	Hold down the battery capacity indicator button "" for 10 seconds		Battery charger failure	Overcharging during charging	Replace the battery charger. The battery pack will return to the normal state, after the battery pack is installed to the bicycle and the bicycle is ridden for a while.
				Charging over current during charging	
		Not turn on		Zero charging current	1. Disconnect the charging plug. 2. Clean the charging connector and charging plug , and dry them. 3. Connect the charging plug to the charging connector. 4. If the battery pack error occurs again, replace the battery charger.

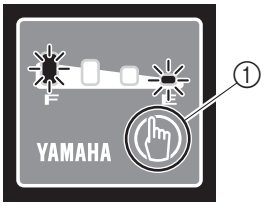

Off Fast flashing

Non-recoverable errors of battery pack

If the battery pack has the errors, the following procedure can be used to access the error diagnosis mode and confirm the details regarding the error of the battery pack.

1. If there is a non-recoverable errors when the battery capacity indicator button "" ① on the battery pack is pushed or connect the battery charger, the battery capacity indicator lamps [1] and [4] fast flash simultaneously.
2. Hold down the battery capacity indicator button "" ① for 10 seconds.
3. The lighting display of the battery capacity indicator lamps indicates the error of the battery pack.

□ Off ■ On ✳ Fast flashing

Battery capacity display lamp		Battery capacity display lamp	Fault device	Failure	Action
1 and 4 flash rapidly	Hold down the residual battery capacity indicator button "☝" for 10 seconds	4 3 2 1	Battery pack failure	FET failure	Replace the battery pack.
		4 3 2 1		AFE fault	
		4 3 2 1		High-temperature exposure	
		4 3 2 1		FET temperature fault	
		4 3 2 1		Cells unbalanced	
		4 3 2 1		Thermistor fault	
		4 3 2 1		Over charging	

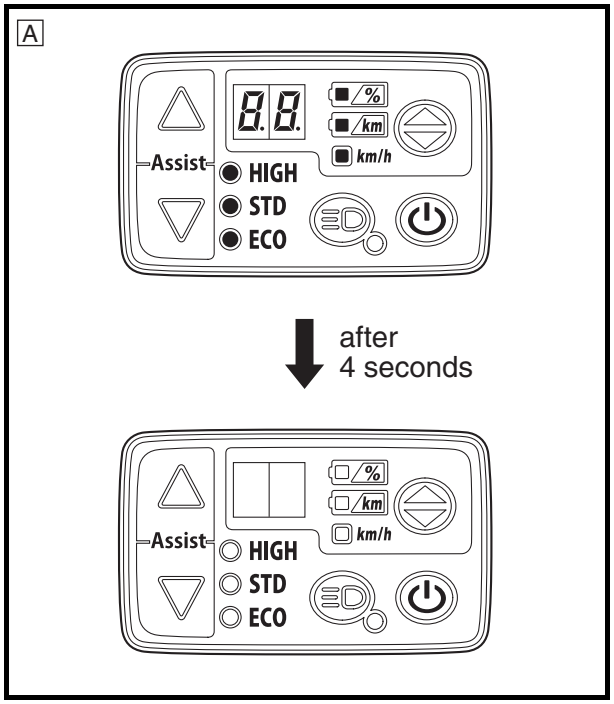

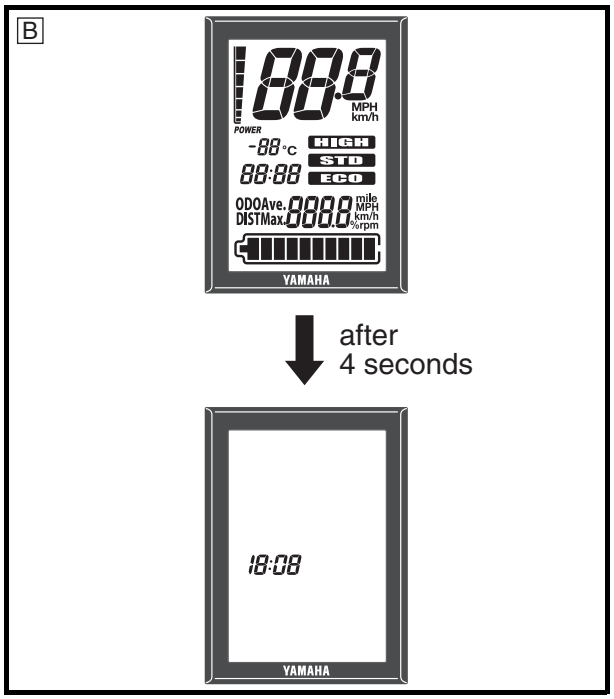

When the battery pack signal lead wire becomes disconnected

Although the power to the display unit is turned on,

- All of the LED displays of the display unit (LED type) turn on for 4 seconds, and then the power turns off automatically (LED) A
- All segments of the display unit (LCD type) unit turn on for 4 seconds, and then the power turns off automatically (LCD) B

If the motor is rotating (while running), the power assist becomes weak and finally stops it. The battery pack stops discharging after a short time.

Action:
Check the battery pack signal lead wire (gray) for a wire break or disconnection.
→ Replace the DC plug or power lead wire.

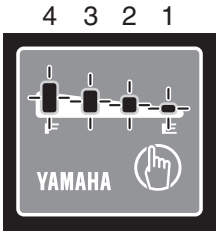

Slow flashing

Temperature protection function

If the battery pack's internal temperature is -20°C or less or 80°C or higher while the battery pack is discharging (during the power assist), the temperature protection function of the battery pack operates and the battery pack stops discharging. If the battery capacity indicator button "☝" is pushed at this time, the battery capacity indicator lamps [1], [2], [3], and [4] flash slowly at the same time.

TIP

The battery pack automatically recovers when the battery pack's internal temperature returns to the allowable temperature range for charging.

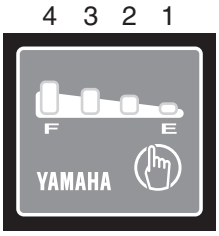

▢ Off

Over-discharge protection function

If the battery pack becomes over-discharged, the over-discharge protection function of the battery pack operates.

If the battery capacity indicator button "(☝)" is pushed at this time, the battery capacity indicator lamps do not turn on.

The following procedure can be used to access the over-discharge protection function diagnostic mode and confirm the details regarding the malfunction of the battery pack.

*First connect the battery charger to the battery.

*Because the battery voltage is insufficient when the battery pack is over-discharged, the battery capacity indicator lamps will not turn on or flash if the battery pack is not connected to the battery charger.

Over-discharging of the battery pack

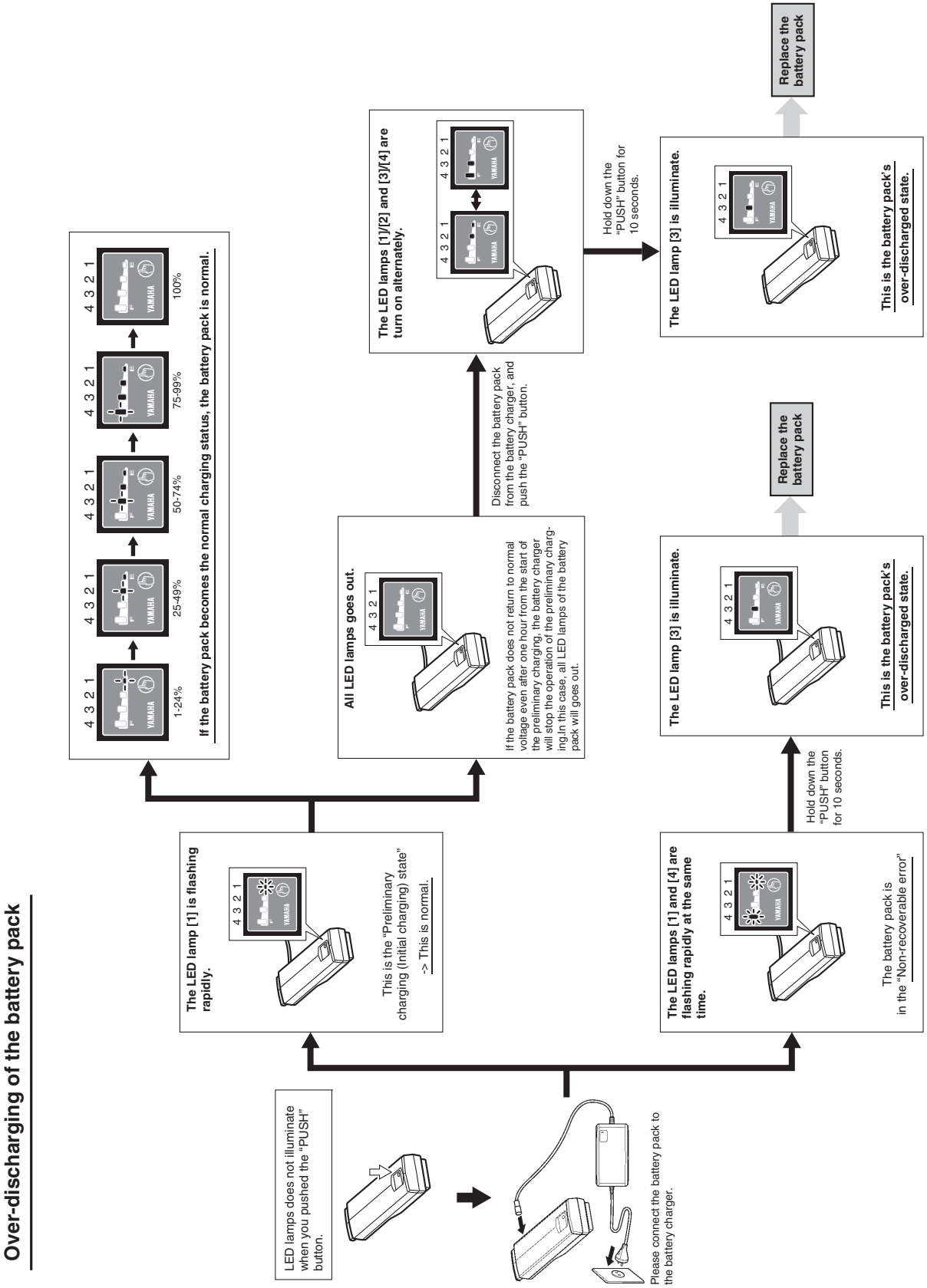

Diagnosis function (LED type display unit)

Display unit's display when there is an error

Detects system malfunctions, changes assist operation, and displays the errors as well as performing error code recording.

Error displays are indicated by the display of "Er" and an error code indicating the type of error. You can switch between "Er" and the error code display by pressing the function select switch "⊜".

When a malfunction which may reflect a abnormal operation is displayed, the malfunction is recorded to prevent recurrence of the condition, and thereafter the power assist will be immediately blocked after the power is turned on and the error will be displayed on the function display in display unit.

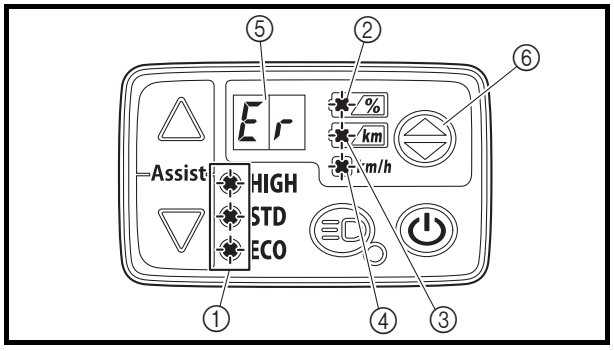

Slow flashing Slow flashing

How communication errors are displayed

The 3 assist mode lamps ①, the "%" lamp ②, the "km" lamp ③, and the "km/h" lamp ④ will flash at the same time, and "Er" will be displayed on the function display ⑤ of the display unit.

When the function select switch "⊜" ⑥ is pressed, error code "12" or "13" will be displayed.

TIP

- The error code is not stored.
- See "List of error codes and corresponding power assist operations" for more details.
- If there is a communication error, the power cannot be turned off using the "POWER" switch of the display unit. To turn the power off, remove the battery.

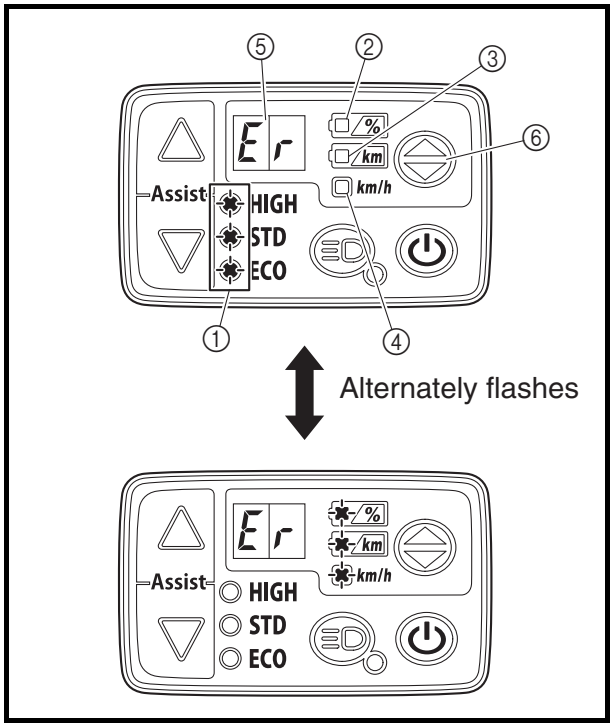

How Drive Unit malfunctions are displayed

The 3 assist mode lamps ①, the "%" lamp ②, the "km" lamp ③, and the "km/h" lamp ④ will flash alternately, and "Er" will be displayed on the function display ⑤ of the display unit.

When the function select switch "⊕" ⑥ is pressed, error code "16" or higher will be displayed.

TIP

- Error codes are stored.
- See "List of error codes and corresponding power assist operations" for more details.

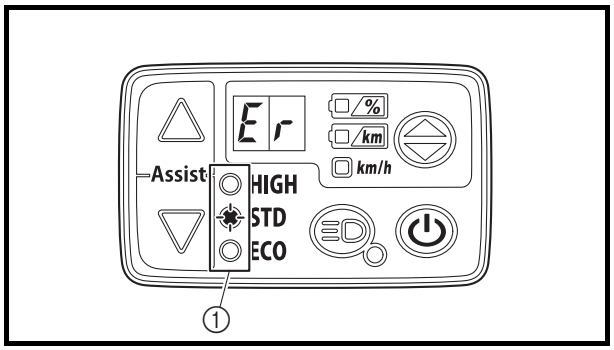

Slow flashing Slow flashing

How speed sensor malfunctions are displayed

The "HIGH", "STD", or "ECO" assist mode lamps ① are displayed with a slow flash (0.5 seconds).

TIP

- Error codes are not stored.
- See "List of error codes and corresponding power assist operations" for more details.
- In assist off mode, displays of malfunctions cannot be made using the assist mode lamp.

Recovery method when there is a speed sensor malfunction

The display will return to normal when the speed sensor returns to normal condition.

Operating Procedures to Diagnosis Mode

This is the mode in which each type of diagnosis and the content of error codes which are stored when there is an error are displayed. You can switch between speed sensor diagnosis mode, Drive Unit diagnosis mode, and error log check mode by using the display unit according to the following procedures.

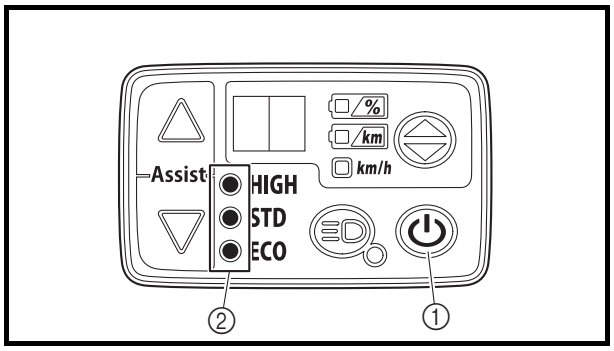

1. Make sure that the power is turned off to the display unit.
   Press the power switch " ⏻ " ① to turn on the power.
   When the power is turned on, all lamps and segments of the display unit will illuminate.
   After approximately 2 seconds, the lamps and segments will turn off, and then the display will return to normal.
2. Press the power switch " ⏻ " ① again, and continue pressing the switch until only the 3 assist mode lamps ② are illuminated. (Approximately 10 seconds)
   Confirm that only the 3 assist mode lamps ② are illuminated, and then release the power switch " ⏻ " ①.

TIP

Steps 1 and 2 must be performed within 30 seconds.

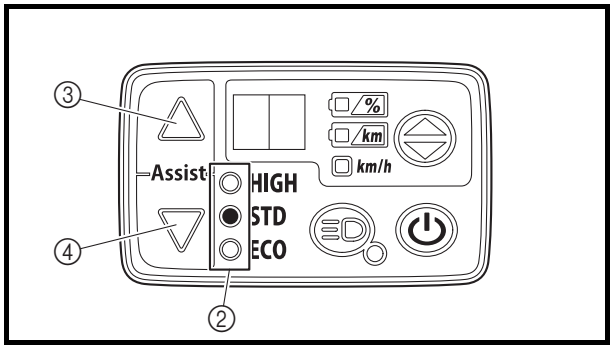

3. Press the assist mode switch "△" ③ or "▽" ④ to change the assist mode.
   When the assist mode is changed, one of the assist mode lamps ② will illuminate. You can select each diagnostic mode by changing the assist mode.
4. Press the light switch "≡D" ⑤.
   The "HIGH", "STD", or "ECO" assist mode lamp ② will flash rapidly (0.2 second) to indicate each of the diagnostic modes.

TIP

If you pressed the wrong switch, turn off the power and perform steps 1–4 again.

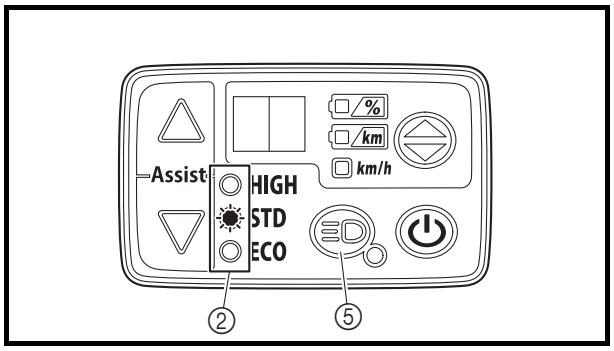

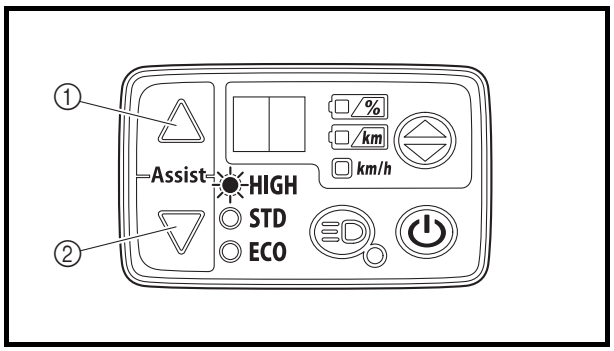

Speed Sensor Diagnosis Mode

Press the assist mode switch "△" ① until the "HIGH" assist mode lamp is illuminated.
Press the light switch "≡D".
The "HIGH" assist mode lamp flashes rapidly (0.2 second).
For more information about the speed sensor diagnosis mode, see "Speed sensor diagnosis mode display method".

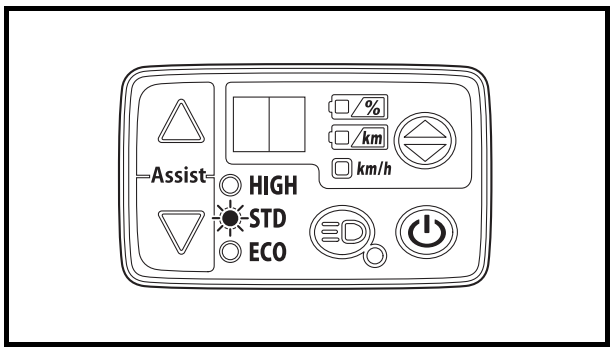

Drive Unit Diagnosis Mode

Press the assist mode switch "△" ① → "▽" ② or "▽" ② → "△" ① until the "STD" assist mode lamp is illuminated.
Press the light switch "≡D".
The "STD" assist mode lamp flashes rapidly (0.2 second).
For more information about the drive unit diagnosis mode, see "Drive unit diagnosis mode display method".

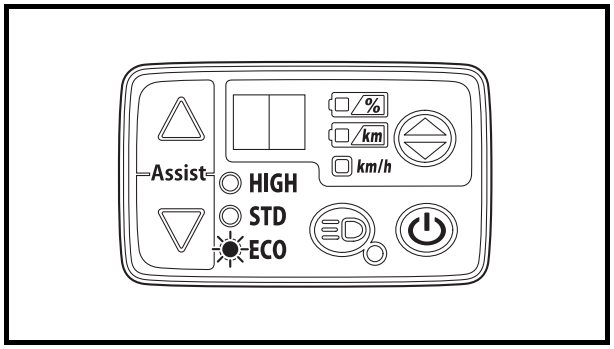

Error Log Check Mode

Press the assist mode switch "▽" ② until the "ECO" assist mode lamp is illuminated.
Press the light switch "≡D".
The "ECO" assist mode lamp flashes rapidly (0.2 second).
For more information about the error log check mode, see "Error log check mode".

✹ Fast flashing

Fast flashing

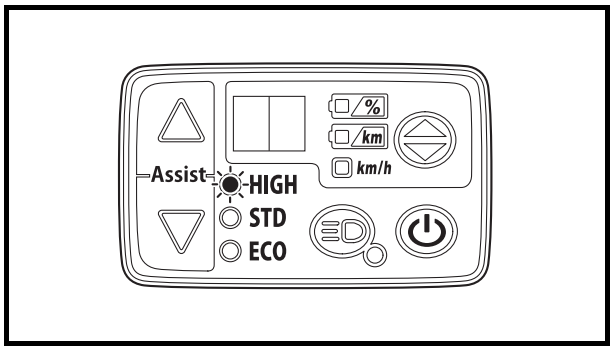

Number of Wheel Rotations	Rotation number display of the display unit
1 rotation	① 1
∫	∫
12 rotations	12
13 rotations	1

Speed Sensor Diagnosis Mode Display Method

To determine if the controller is correctly recognizing the speed sensor signal, rotate the wheel to which the speed sensor is connected and make sure that the number of rotations of the wheel indicated matches the actual number of rotations.

1. Go into speed sensor diagnosis mode.
   See “Operating Procedures to Diagnosis Mode.”
   Confirm that the “HIGH” lamp of the assist mode lamps is flashing fast.
2. When you raise and rotate the wheel (with the speed sensor), the rotation number display ① on the display unit will change.
   Before rotating the wheel (with the speed sensor), “0” will be displayed on the rotation number display ① of the display unit.
   When you rotate the wheel (with the speed sensor) 1 time, “1” will be displayed on the rotation number display ① of the display unit.
   When you rotate the wheel (with the speed sensor) 12 times, “12” will be displayed on the rotation number display ① of the display unit.
   When you rotate the wheel (with the speed sensor) 13 times, the display of the rotation number display ① of the display unit will return to “1”.
   Thereafter, each time the wheel (with the speed sensor) is rotated, the number of rotation number display ① on the display unit will be from “1” to “12”.

TIP

- You should at least rotate the wheel (with speed sensor) 3 times and make sure that “3” is displayed.
- If the speed sensor malfunctions, the number of rotations displayed on the display unit will increase before the wheel (with speed sensor) is rotated even once, or the number will not increase even when the wheel (with speed sensor) is rotated once (or there is a delay in the increase in the value).

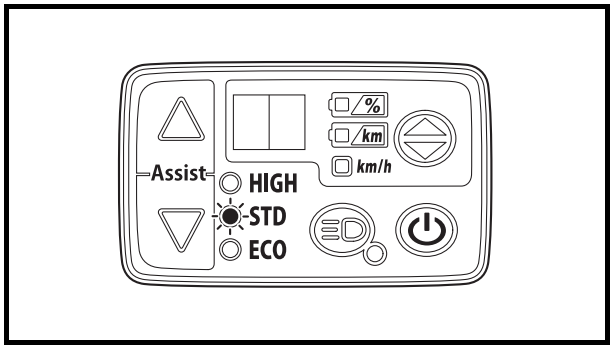

Fast flashing

Drive Unit Diagnosis Mode Display Method

You can check the status of or malfunctions in the Drive Unit.

1. Go into Drive Unit diagnosis mode.
   See "Operating Procedures to Diagnosis Mode."
   Confirm that the "STD" of the assist mode lamps is flashing fast.
   After the diagnosis mode indicator of the display unit has displayed "1" for up to 10 seconds, you can check the torque sensor reference voltage, motor current, error displays ("E2", "E4"), and the display unit function check.

List of Drive Unit Diagnosis Mode Display Methods

Inspection items	Diagnosis mode display	Press operating button	Diagnosis data display	Press operating button
1) Torque sensor reference voltage	10		Values are displayed from 0.0 to 5.0 (V) 0.0 ~ 5.0	To 2) Motor current
2) Motor current	14		Motor output current in "HIGH" mode is displayed as 00 to "FL (= FULL)" (= % output). 00 ~ FL	To 3) Error display
3) Error display	16		There is no display when there are no errors. When there is an error, either "E2" (motor) or "E4" (controller) are displayed. E2 or E4	To 4) Display unit function check
4) Display unit function check	18		All segments and lamps are illuminated. (Segments and lamps that are not illuminated indicate a malfunction.)	Power goes off

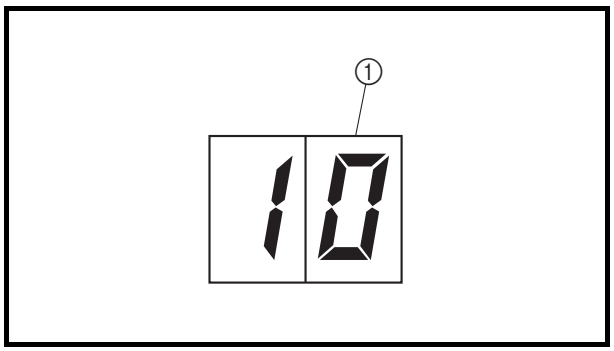

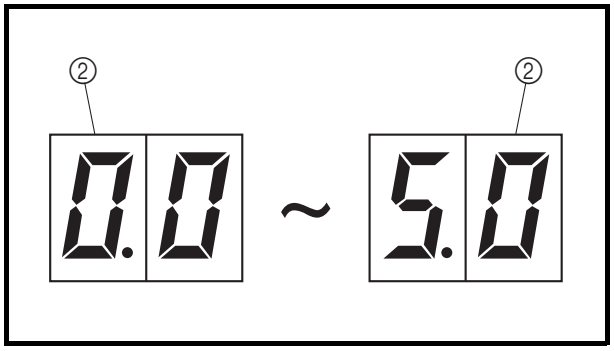

* Determining whether or not the torque sensor is good
0.2 to 1.1 V = normal
If the torque sensor is outside of this range
→ Implement the torque sensor reference voltage adjustment function.
If the torque sensor remains outside of its normal range after torque sensor reference voltage adjustment
→ Torque sensor malfunction (replace)

1) Torque sensor reference voltage

1. Torque sensor reference voltage display

a. "10" is displayed in the diagnosis mode display ① of the display unit.

b. Press the function select switch "⊜" of the display unit.

c. Displayed in units of 0.1 V from 0.0 to 5.0 V in the diagnosis data display ② of the display unit.

d. The torque sensor is normal if the display voltage is 0.2 to 1.1 V.
Perform a torque sensor reference voltage adjustment if values outside of this range are displayed.

e. Press the light switch "≡D" of the display unit.

f. Proceed to 2) Motor current.

2. Torque sensor reference voltage adjustment function
Turn the power on to the display unit and let it stand.
Guideline: Until the power to the display unit is turned off automatically (about 5 min.).

TIP
Do not place feet on the pedals while performing a torque sensor reference voltage adjustment.

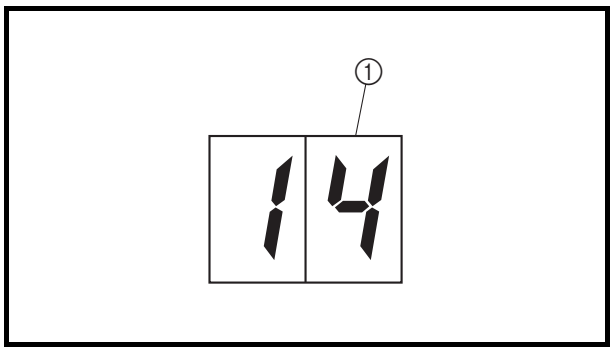

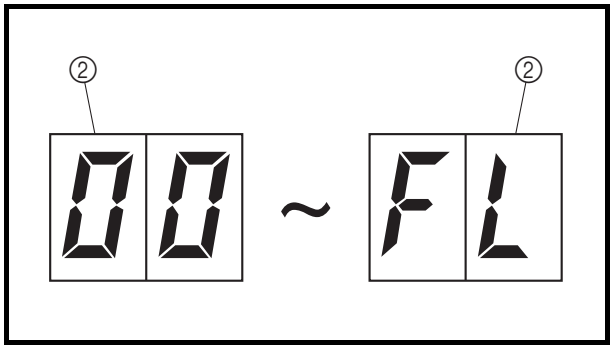

2) Motor current

a. "14" is displayed in the diagnosis mode display ① of the display unit.

b. Press the function select switch "⊜" button of the display unit.

c. The diagnosis data display ② of the display unit displays the motor output current (%) from "00" to "FL (= FULL)".

d. Confirm that the diagnosis data display ② of the display unit displays "FL" when applying the rear brake and strongly pressing on the pedals.
   - "FL" is displayed: good
   - "FL" is not displayed: If the bicycle was ridden immediately before checking the motor current, it is possible that the battery or the controller temperature control is working; therefore, wait until the bicycle cools down. If the bicycle was not ridden immediately before checking the motor current, recheck using a battery that is operating properly.
   - "FL" is not displayed: The battery response is weak in winter (low temperatures), so use a battery that has been stored in a heated room.
   - "FL" is not displayed: Replace the controller assembly.

e. Press the light switch "≡D" of the display unit.

f. Proceed to 3) Error displays.

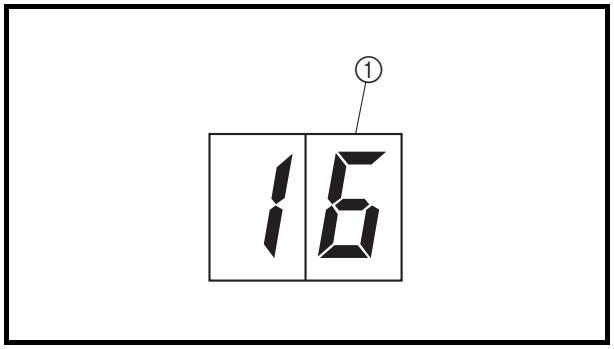

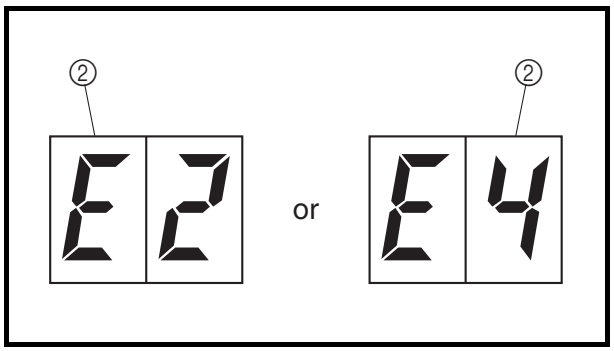

3) Error displays

a. "16" is displayed in the diagnosis mode display ① of the display unit.

b. Press the function select switch "⊜" of the display unit.

c. When there is a malfunction, "E2" (motor) or "E4" (controller) will be displayed on the diagnosis data display ② of the display unit.

TIP

Check the error code if "E2" or "E4" are displayed.

d. Press the light switch "≡D" of the display unit.

e. Proceed to 4) Display unit function check.

TIP

- When there is no malfunction the next "18" is displayed without the diagnosis mode "16" being displayed.
- Perform a final check to make sure there is no error display in this mode when performing repairs or replacing parts.

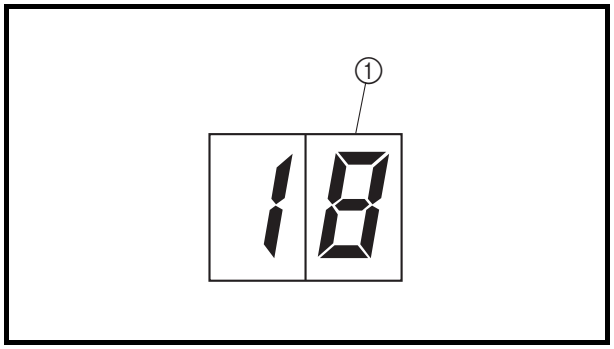

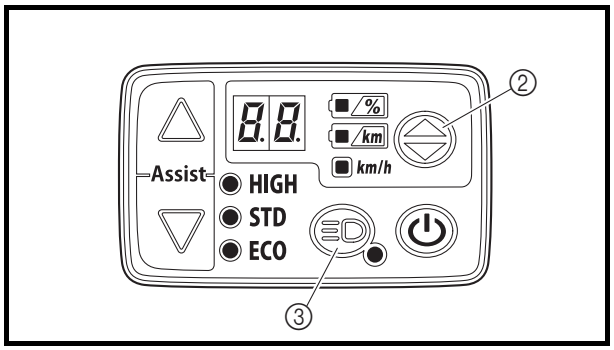

● On ■ On

4) Display unit function check

a. "18" is displayed in the diagnosis mode display ① of the display unit.

b. Press the function select switch "⊜" ② of the display unit.

c. All segments and all lamps of the display unit will illuminate.

d. Replace the display unit if there are segments or lamps which are not illuminated.

e. Press the light switch "≡D" ③ of the display unit.

f. The power to the display unit is turned off.

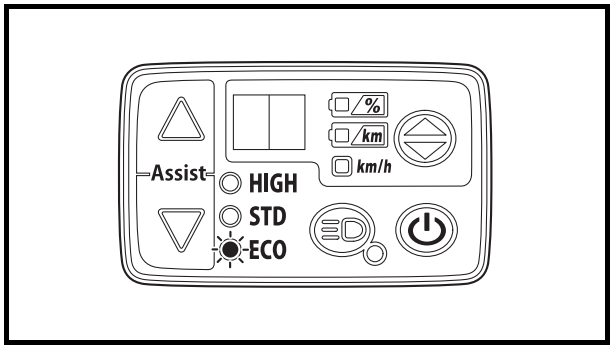

Fast flashing

Error Log Check Mode Display Method

The three most recent types of error codes which are stored when there is an error are stored and these are displayed in order from the most recent every 10 seconds.

1. Go into error log check mode.
   See "Operating Procedures to Diagnosis Mode."
   Confirm that the "ECO" lamp of the assist mode lamps is flashing fast.
   The display unit displays the three most recent error codes in the order stored as "E1" to "E3". To display the error codes, press the function select switch "⊜" of the display unit.
   "0" will be displayed when there are no errors.
   When other error codes are stored, the display will switch to the next error in 10 seconds.

List of Error Log Check Mode Display Methods

Number of error codes	How error codes are displayed on the display unit
When there are no error codes	0
When there is 1 error code	E1 → Error code displays
When there are 2 error codes	E1 → Error code displays ([E1] along with the error code are displayed for 10 seconds) ⇔ E2 → Error code displays ([E2] along with the error code are displayed for 10 seconds)
When there are 3 error codes	E1 → Error code displays ([E1] along with the error code are displayed for 10 seconds) → E2 → Error code displays ([E2] along with the error code are displayed for 10 seconds) → E3 → Error code displays ([E3] along with the error code are displayed for 10 seconds) → E1

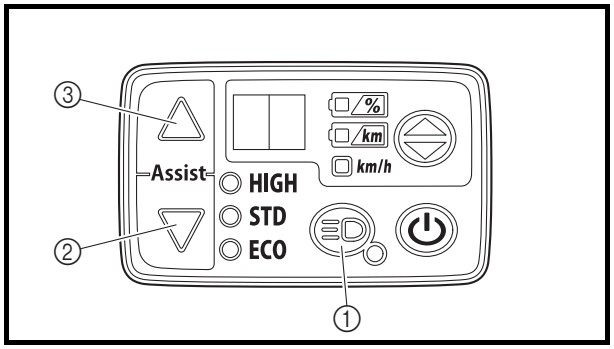

How to delete the malfunction history

1. While pressing the light switch "≡D" ① during the error code display, press the assist mode switch power assist decrease ② and power assist increase ③ to switch.

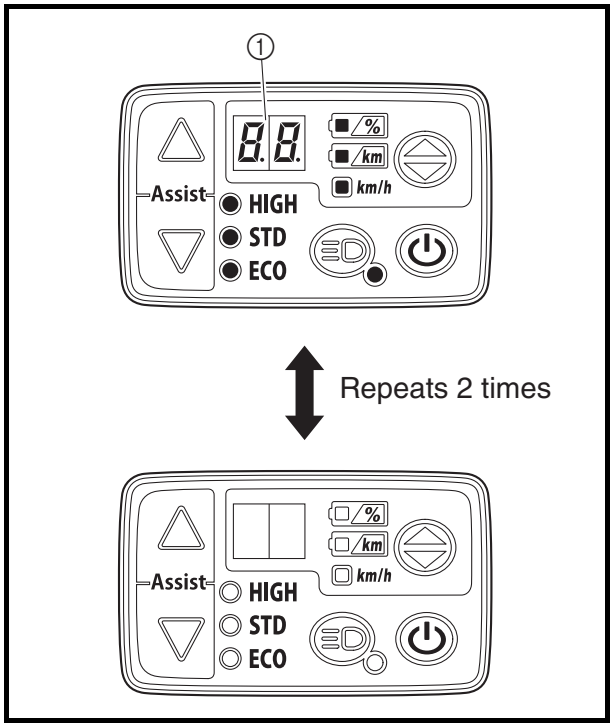

2. The diagnostic display pattern will stop, all lamps will turn on and off twice ("8.8." will be shown in the error code display ① of the display unit), and the history will be deleted. The power to the display unit will be turned off at this time.

TIP

Be sure to clear the diagnosis history after replacing the motor or other parts.

Diagnosis function (LCD type display unit)

Display unit's display when there is an error

Detects system malfunctions, changes assist operation, and displays the errors as well as performing error code recording.

Error displays are indicated by the display of "Er" and an error code indicating the type of error. You can switch between "Er" and the error code display by pressing the function select switch "Ⓢ".

When a malfunction which may reflect a serious abnormal operation is displayed, the malfunction is recorded to prevent recurrence of the condition, and thereafter the power assist will be immediately blocked after the power is turned on and the error will be displayed on the speedometer section in display unit.

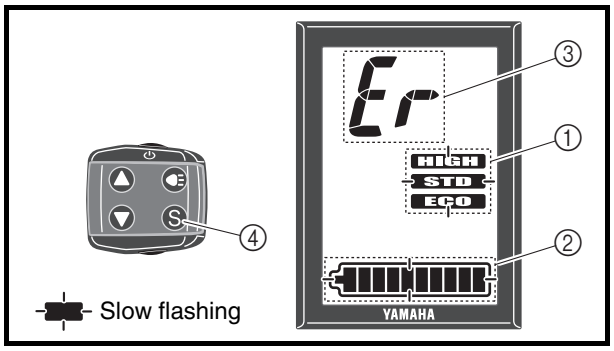

How communication errors are displayed

All segments of the assist mode indicator ① and battery capacity indicator ② will flash at the same time, and "Er" will be displayed on the speedometer section ③ of display unit.

When the function select switch "Ⓢ" ④ is pressed, error code "12", "13" or "15" will be displayed.

TIP

- The error code is not stored.
- See "List of error codes and corresponding power assist operations" for more details.
- If there is a communication error, the power cannot be turned off using the "POWER" switch of the display unit. To turn the power off, remove the battery.

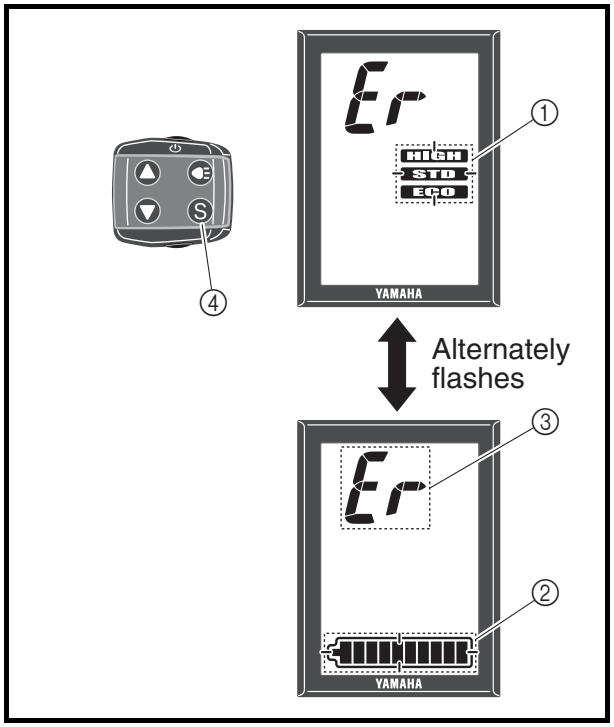

How Drive Unit malfunctions are displayed

All segments of the assist mode indicator ① and all segments of the battery capacity indicator ② will flash alternately, and "Er" will be displayed on the speedometer section ③ of the display unit. When the function select switch "Ⓢ" ④ is pressed, error code "16" or higher will be displayed.

TIP

- Error codes are stored.
- See "List of error codes and corresponding power assist operations" for more details.

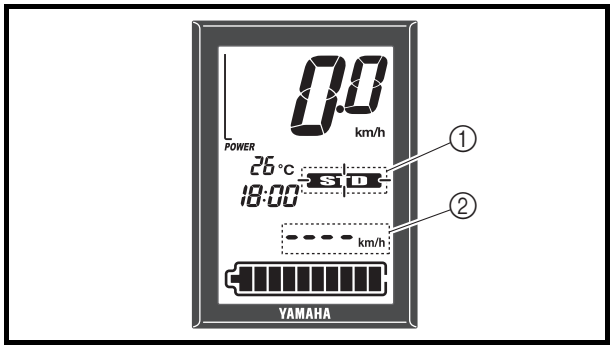

Slow flashing

How speed sensor malfunctions are displayed

The "HIGH", "STD", or "ECO" assist mode indicator ① are displayed with a slow flash (0.5 seconds).

The function display part ② are displayed with "----" when you select as follwing functions.

- Average bicycle speed
- Maximum bicycle speed
- Trip meter
- Odometer

TIP

- Error codes are not stored.
- In assist off mode, displays of malfunctions cannot be made using the assist mode display.
- Average bicycle speed, maximum bicycle speed, tripmeter, and odometer are not updated when speed sensor malfunction is occurred.
- See "List of error codes and corresponding power assist operations" for more details.

Recovery method when there is a speed sensor malfunction

The display will return to normal when the speed sensor returns to normal condition.

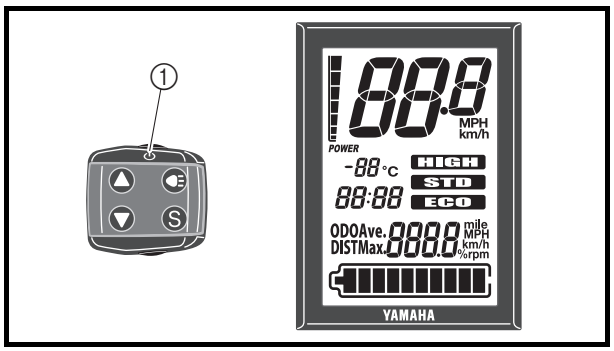

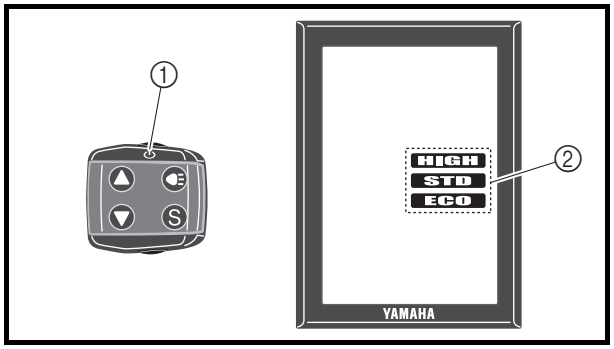

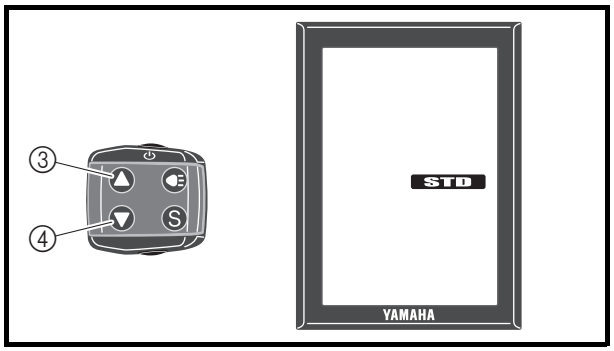

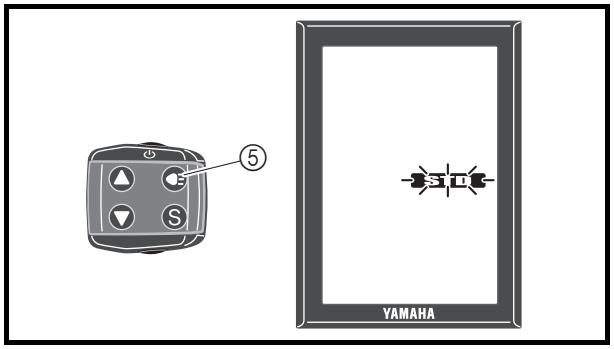

Operating Procedures to Diagnosis Mode

This is the mode in which each type of diagnosis and the content of error codes which are stored when there is an error are displayed. You can switch between speed sensor diagnosis mode, Drive Unit diagnosis mode, and error log check mode by using the display unit according to the following procedures.

1. Make sure that the power is turned off to the display unit.
   Press the power switch " ⏻ " ① to turn on the power.
   When the power is turned on, all segments of the display unit will come on.
   After approximately 2 seconds, the segments will turn off, and then the display will return to normal.
2. Press the power switch " ⏻ " ① again, and continue pressing the switch until only the 3 assist mode indicators ② come on. (Approximately 10 seconds)
   Confirm that only the 3 assist mode indicators ② have come on, and then release the power switch " ⏻ " ①.

TIP

Steps 1 and 2 must be performed within 30 seconds.

3. Press the assist mode switch "△" ③ or "▽" ④ to change the assist mode.
   When the assist mode is changed, one of the assist mode indicators ② will come on.
   You can select each diagnostic mode by changing the assist mode.
4. Press the light switch "≡D" ⑤.
   The "HIGH", "STD", or "ECO" assist mode indicator ② will flash rapidly (0.2 second) to indicate each of the diagnostic modes.

TIP

If you pressed the wrong switch, turn off the power and perform steps 1–4 again.

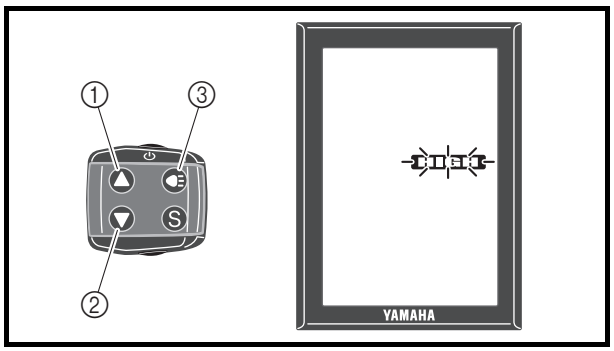

Speed Sensor Diagnosis Mode

Press the assist mode switch "△" ① until the "HIGH" assist mode indicator comes on.
Press the light switch "≡D" ③.
The "HIGH" assist mode indicator flashes rapidly (0.2 second).
For more information about the speed sensor diagnosis mode, see "Speed sensor diagnosis mode display method".

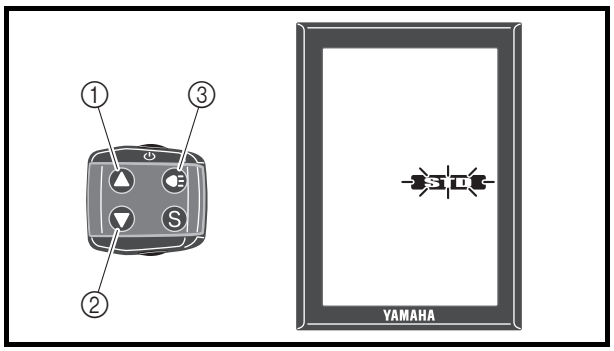

Drive Unit Diagnosis Mode

Press the assist mode switch "△" ① → "▽" ② or "▽" ② → "△" ① until the "STD" assist mode indicator comes on.
Press the light switch "≡D" ③.
The "STD" assist mode indicator flashes rapidly (0.2 second).
For more information about the drive unit diagnosis mode, see "Drive unit diagnosis mode display method".

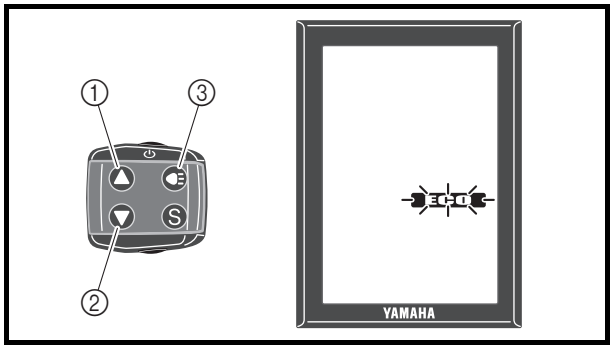

Error Log Check Mode

Press the assist mode switch "▽" ② until the "ECO" assist mode indicator comes on.
Press the light switch "≡D" ③.
The "ECO" assist mode indicator flashes rapidly (0.2 second).
For more information about the error log check mode, see "Error log check mode".

Fast flashing

Speed Sensor Diagnosis Mode Display Method

To determine if the controller is correctly recognizing the speed sensor signal, rotate the wheel to which the speed sensor is connected and make sure that the number of rotations of the wheel indicated matches the actual number of rotations.

Fast flashing

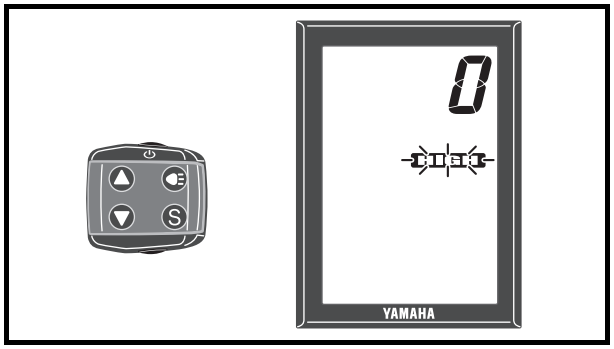

1. Go into speed sensor diagnosis mode.
   See “Operating Procedures to Diagnosis Mode.”
   Confirm that the assist mode display is flashing “HIGH” rapidly (0.2 seconds).

Number of Wheel Rotations	Rotation number display of the display unit
1 rotation	① 1
∫	∫
12 rotations	12
13 rotations	1

2. When you raise and rotate the wheel (with the speed sensor), the rotation number display ① on the display unit will change.
   Before rotating the wheel (with the speed sensor), “0” will be displayed on the rotation number display ① of the display unit.
   When you rotate the wheel (with the speed sensor) 1 time, “1” will be displayed on the rotation number display ① of the display unit.
   When you rotate the wheel (with the speed sensor) 12 times, “12” will be displayed on the rotation number display ① of the display unit.
   When you rotate the wheel (with the speed sensor) 13 times, the display of the rotation number display ① of the display unit will return to “1”.
   Thereafter, each time the wheel (with the speed sensor) is rotated, the number of rotations display ① on the display unit will be from “1” to “12”.

TIP

- You should at least rotate the wheel (with the speed sensor) 3 times and make sure that “3” is displayed.
- If the speed sensor malfunctions, the number of rotations displayed on the display unit will increase before the wheel (with the speed sensor) is rotated even once, or the number will not increase even when the wheel (with the speed sensor) is rotated once (or there is a delay in the increase in the value).

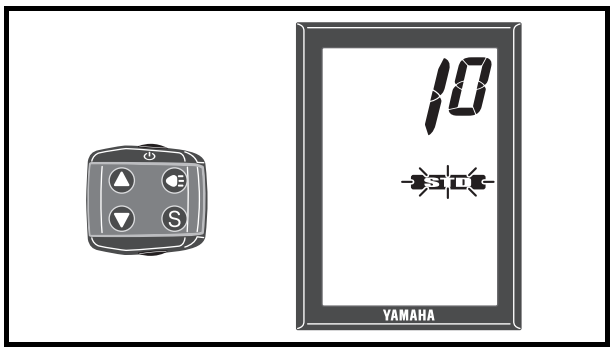

Fast flashing

Drive Unit Diagnosis Mode Display Method

You can check the status of or malfunctions in the Drive Unit.

1. Go into Drive Unit in diagnosis mode.
   See "Operating Procedures to Diagnosis Mode."
   Confirm that the assist mode display is flashing "STD" fast (0.2 seconds).
   After the diagnosis mode indicator of the display unit has displayed "1" for up to 10 seconds, you can check the torque sensor reference voltage, motor current, error displays ("E2", "E4"), and the display unit function check.

List of Drive Unit Diagnosis Mode Display Methods

Inspection items	Diagnosis mode display	Press operating button	Diagnosis data display	Press operating button
1) Torque sensor reference voltage	10		Values are displayed from 0.0 to 5.0 (V) 0.0 ~ 5.0	To 2) Motor current
2) Motor current	14		Motor output current in "HIGH" mode is displayed as 0 to 100 (= % output). 0 ~ 100	To 3) Error display
3) Error display	16		There is no display when there are no errors. When there is an error, either "E2" (motor) or "E4" (controller) are displayed. E2 or E4	To 4) Display unit function check
4) Display unit function check	18		All segments are illuminated (segments that are not illuminated indicate a malfunction.)	Power goes off

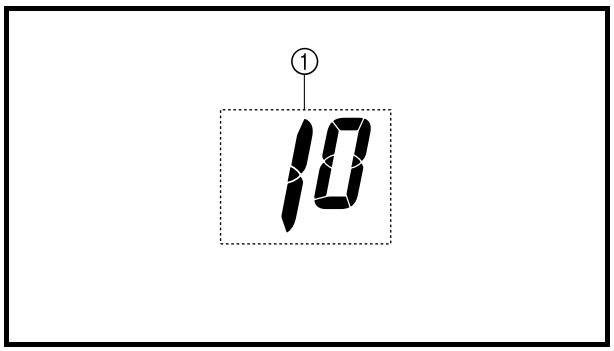

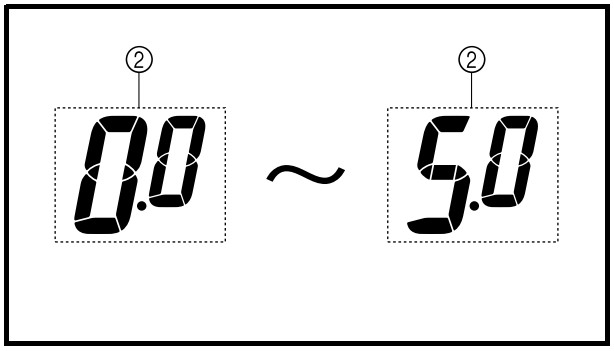

* Determining whether or not the torque sensor is good
0.2 to 1.1 V = normal
If the torque sensor is outside of this range
→Implement the torque sensor reference voltage adjustment function.
If the torque sensor remains outside of its normal range after torque sensor reference voltage adjustment
→Torque sensor malfunction (replace)

1) Torque sensor reference voltage

1. Torque sensor reference voltage display

a. "10" is displayed in the diagnosis mode display ① of the display unit.

b. Press the function select switch "Ⓢ" of the display unit.

c. Displayed in units of 0.1 V from 0.0 to 5.0 V in the diagnosis data display ② of the display unit.

d. The torque sensor is normal if the display voltage is 0.2 to 1.1 V.
Perform a torque sensor reference voltage adjustment if values outside of this range are displayed.

e. Press the light switch "◉" of the display unit.

f. Proceed to 2) Motor current.

2. Torque sensor reference voltage adjustment function
Turn the power on to the display unit and let it stand.
Guideline: Until the power to the display unit is turned off automatically (about 5 min.).

TIP
Do not place feet on the pedals while performing a torque sensor reference voltage adjustment.

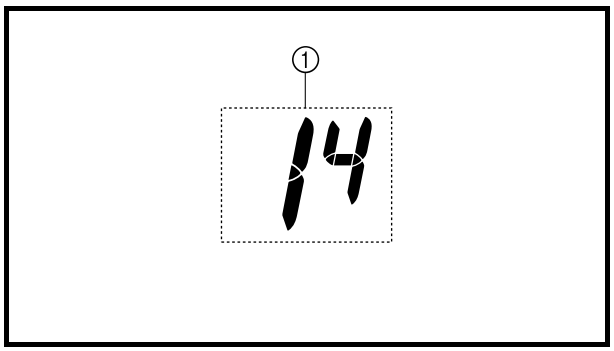

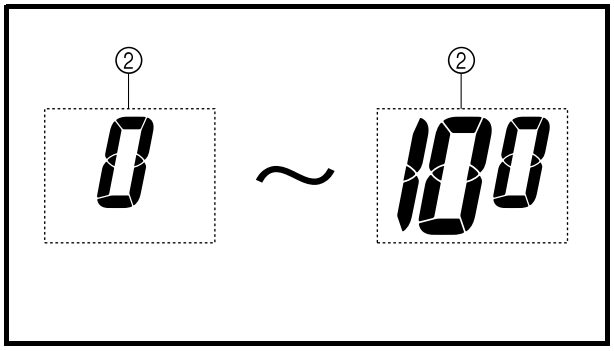

2) Motor current

a. “14” is displayed in the diagnosis mode display ① of the display unit.

b. Press the function select switch “Ⓢ” of the display unit.

c. The diagnosis data display ② of the display unit displays the motor output current (%) from “0” to “100”.

d. Confirm that the diagnosis data display ② of the display unit displays “100” when applying the rear brake and strongly pressing on the pedals.
   - “100” is displayed: good
   - “100” is not displayed: If the bicycle was ridden immediately before checking the motor current, it is possible that the battery or the controller temperature control is working; therefore, wait until the bicycle cools down. If the bicycle was not ridden immediately before checking the motor current, recheck using a battery that is operating properly.
   - “100” is not displayed: The battery response is weak in winter (low temperatures), so use a battery that has been stored in a heated room.
   - “100” is not displayed: Replace the controller assembly.

e. Press the light switch “ ” of the display unit.

f. Proceed to 3) Error displays.

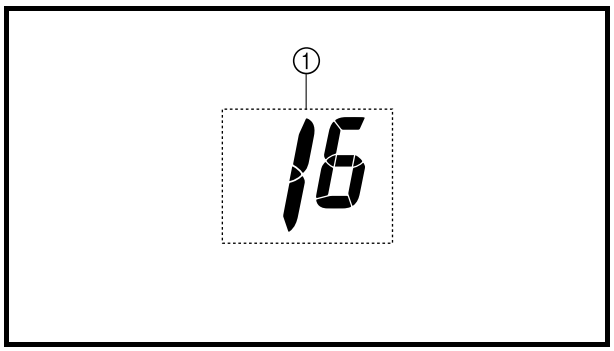

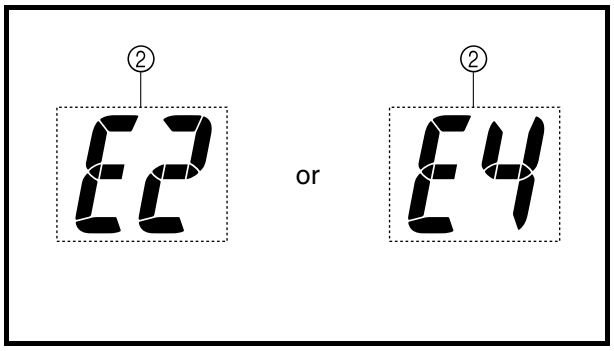

3) Error displays

a. "16" is displayed in the diagnosis mode display ① of the display unit.

b. Press the function select switch "Ⓢ" of the display unit.

c. When there is a malfunction, "E2" (motor) or "E4" (controller) will be displayed on the diagnosis data display ② of the display unit.

TIP

Check the error code if "E2" or "E4" are displayed.

d. Press the light switch "" of the display unit.

e. Proceed to 4) Display unit function check.

TIP

- When there is no malfunction the next "18" is displayed without the diagnosis mode "16" being displayed.
- Perform a final check to make sure there is no error display in this mode when performing repairs or replacing parts.

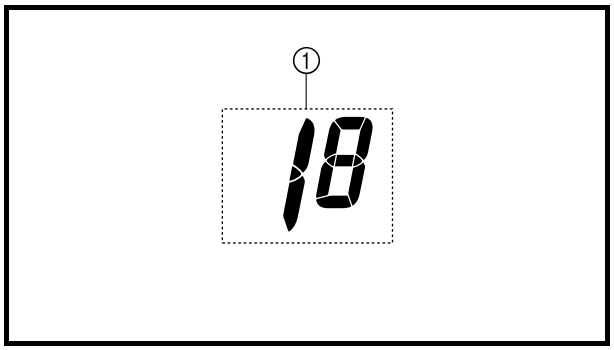

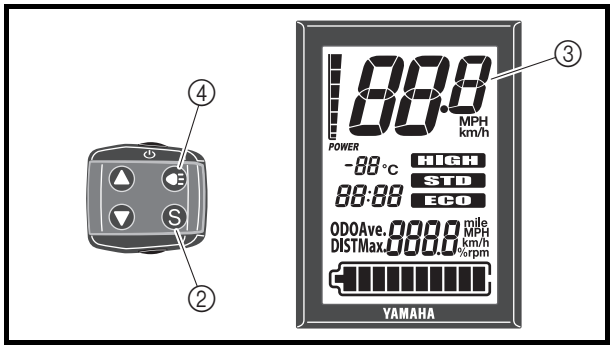

4) Display unit function check

a. "18" is displayed in the diagnosis mode display ① of the display unit.

b. Press the function select switch "Ⓢ" ② of the display unit.

c. All segments of the display unit ③ will illuminate.

d. Replace the display unit if there are segments which are not illuminated.

e. Press the light switch "" ④ of the display unit.

f. The power to the display unit is turned off.

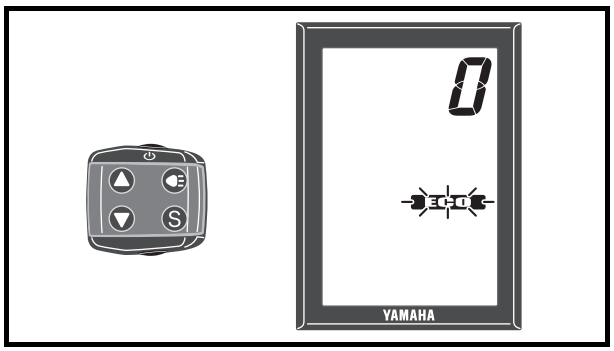

Fast flashing

Error Log Check Mode Display Method

The three most recent types of error codes which are stored when there is an error are stored and these are displayed in order from the most recent every 10 seconds.

1. Go into error log check mode.
   See “Operating Procedures to Diagnosis Mode.”
   Confirm that the assist mode display is flashing “ECO” fast (0.2 seconds).
   The display unit displays the three most recent error codes in the order stored as “E1” to “E3”. To display the error codes, press the function select switch “ Ⓢ ” of the display unit.
   “0” will be displayed when there are no errors.
   When other error codes are stored, the display will switch to the next error in 10 seconds.

List of Error Log Check Mode Display Methods

Number of error codes	How error codes are displayed on the display unit
When there are no error codes	0
When there is 1 error code	E1 Ⓢ → Error code displays
When there are 2 error codes	E1 Ⓢ → Error code displays ([E1] along with the error code are displayed for 10 seconds) ⇔ E2 Ⓢ → Error code displays ([E2] along with the error code are displayed for 10 seconds)
When there are 3 error codes	E1 Ⓢ → Error code displays ([E1] along with the error code are displayed for 10 seconds) → E2 Ⓢ → Error code displays ([E2] along with the error code are displayed for 10 seconds) → E3 Ⓢ → Error code displays ([E3] along with the error code are displayed for 10 seconds) → E1

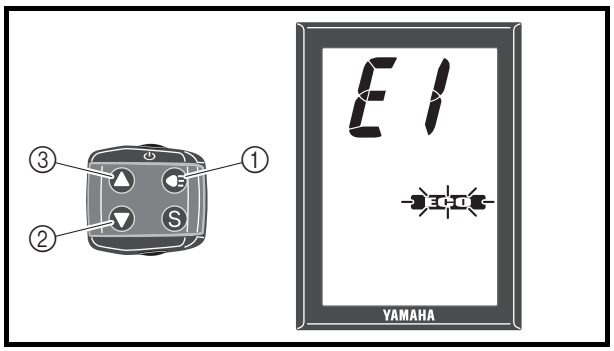

Fast flashing

How to delete the malfunction history

1. While pressing the light switch "◀≡" ① during the error code display, press the assist mode switch power assist decrease ② and power assist increase ③ to switch.

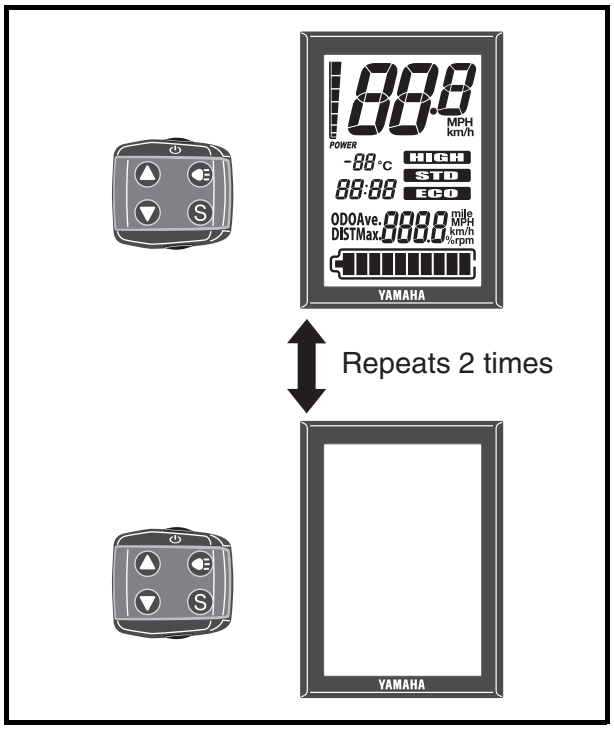

2. The diagnostic display pattern will stop, all segment lights will turn on and off twice, and the history will be deleted.
   The power to the display unit will be turned off at this time.

TIP

Be sure to clear the diagnosis history after replacing the motor or other parts.

Diagnosis function
List of error codes and corresponding power assist operations.

Display pattern	Fault device	Error codes	Fault details	Power assist behavior and error code record	*Restoration Max Level	Action
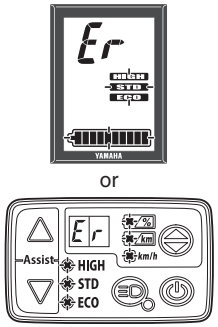	Display unit	12	Stopped the communications to the display unit.	Power assist is normal. Error code does not record.	0	Replace the display unit assembly.
		13	Communication data failure to display unit.			
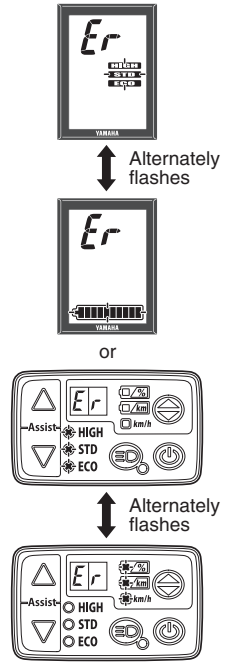	Display unit	15	Display comes off from the holder.	Power assist will stop after determine the error. Error code does not record.	0	Replace the display unit assembly.
	Encoder	16	Disconnected or red wire is short-circuited.	Power assist will immediately stop after determine the error. Error code will record.	1	1. Check the encoder connector. 2. Replace the encoder lead wire. 3. Replace the motor assembly.
		17	Black wire is short-circuited.			
	Torque Sensor	20	Disconnected.	Power assist will stop after determine the error. Error code will record.	1	1. Replace the encoder lead wire 2. Replace the torque sensor assembly.
		21	Short-circuited.			
		22	Wiring failure between the torque sensor and the controller.			

Display pattern	Fault device	Error codes	Fault details	Power assist behavior and error code record	*Restoration Max Level	Action
Alternately flashes 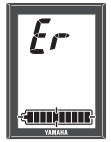 or 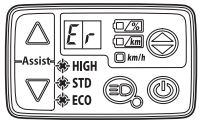 Alternately flashes 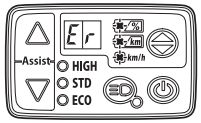	Torque Sensor	23	Abnormal voltage. (detected during running / with slight voltage rise)	Power assist will stop after determine the error. Error code will record.	2	1. Perform the torque sensor reference voltage adjustment. 2. Replace the torque sensor assembly.
		24	Abnormal voltage. (detected during running / with high constant voltage)			
		25	Abnormal voltage. (detected during running / others)			
		26	Abnormal voltage. (detected during running at low speeds)			
		27	Wiring failure between the coil and the circuit board. (wire chattering: nearly disconnected)			Replace the torque sensor assembly.
		28	Wiring failure between the coil and the circuit board. (wire chattering: nearly disconnected)			
		29	Abnormal no-load voltage.			1. Perform the torque sensor reference voltage adjustment. 2. Replace the torque sensor assembly.
		30	Abnormal voltage. (detected during running/with high constant voltage.)		2	Replace the torque sensor assembly.
		31	Abnormal voltage. (detected during running/with slight voltage rise.)			

Display pattern	Fault device	Error codes	Fault details	Power assist behavior and error code record	*Restoration Max Level	Action
Alternately flashes 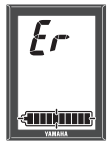 or 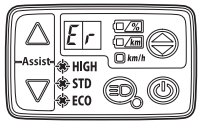 Alternately flashes 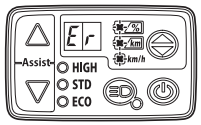	Crank sensor	32	Torque sensor or crank sensor failure.	Power assist will stop after determine the error. Error code will record.	1	1. Replace the torque sensor. 2. Replace the crank sensor. 3. Replace the encorder lead wire. 4. Replace the drive axle assembly.
		33	Short-circuited or crank sensor failure.			1. Replace the crank sensor. 2. Replace the encorder lead wire. 3. Replace the drive axle assembly.
	Motor	40	3 lead wires are disconnected.	Power assist will immediately stop after determine the error. Error code will record.	1	1. Replace the controller assembly. 2. Replace the motor assembly.
		41	Yellow lead wire is disconnected. (U phase)	Power assist will stop after determine the error. Error code will record.		Replace the controller assembly.
		42	Blue lead wire is disconnected. (V phase)			
		43	White lead wire is disconnected. (W phase)			

Display pattern	Fault device	Error codes	Fault details	Power assist behavior and error code record	*Restoration Max Level	Action
Alternately flashes 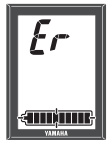 or 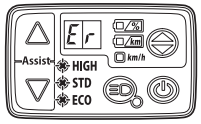 Alternately flashes 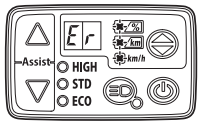	Motor or Controller	50	Abnormal voltage of the sensor for U phase current while the motor is not operating.	Power assist will immediately stop after determine the error. Error code will record.	1	Replace the controller assembly.
		51	Abnormal voltage of the sensor for V phase current while the motor is not operating.			
		52	Abnormal voltage of the sensor for W phase current while the motor is not operating.			
		53	Over current is applied to the U phase of the motor.	Power assist will stop after determine the error. Error code will record.	2	1. Replace the controller assembly. 2. Replace the motor assembly.
		54	Over current is applied to the V phase of the motor.			
		55	Over current is applied to the W phase of the motor.			
		56	Abnormal DC current	Power assist will immediately stop after determine the error. Error code will record.	1	
		60	Not within the 12V output range	Power assist will immediately stop after determine the error. Error code will record.	1	Replace the controller assembly.
		70	External memory data error	Power assist will immediately stop after determine the error. Error code will record.	1	Replace the controller assembly.
		71	Failure in data reading			

Display pattern	Fault device	Error codes	Fault details	Power assist behavior and error code record	*Restoration Max Level	Action
Alternately flashes 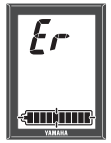 or 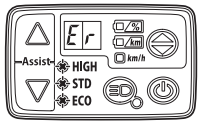 Alternately flashes 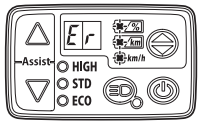	Motor or Controller	80	Detected circuit board temperature is too low. (–20°C)	Power assist will stop after determine the error. Error code will record.	2	Replace the controller assembly.
		81	Detected circuit board temperature is too high. (125°C) (including DC circuit)			
		82	Sensor on the board is nearly detached.			
	Others	89	Detected circuit board temperature is too high. (90°C)	Power assist is normal. Error code will record.	0	1. Check the environment of usage. 2. Replace the controller assembly.

Display pattern	Fault device	Error codes	Fault details	Power assist behavior and error code record	*Restoration Max Level	Action
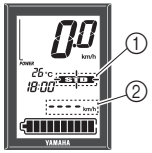 or 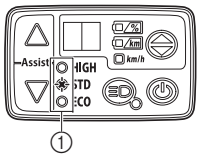 Assist mode lamps ① are displayed with a slow flashes. Function displays ② are displayed with "----".	Speed Sensor	–	The vehicle speed has not gone out though the motor is rotating.	Power assist becomes weak. Error code does not record.	0	1. Check the speed sensor lead connector. 2. Check the gap between the pick up and the magnet sensor spoke type. (See "Speed sensor" for the specified gap.) 3. Replace the speed sensor set.
		–	Abnormal width of the pulse (detected during running)			
All segments or LED turned off	Battery	90	Detected battery voltage is too high.(45V)	Power assist will stop after determine the error. (Also display unit will turn off) Error code will record.	1	Replace the battery
All segments or LED turned off. When you turn on the main switch, all segments or LED will turn on during 4 seconds, then automatically turn off.		91	Can't receive data from battery correctly	Power assist will immediately stop after determine the error. (Also display unit will turn off) Error code will record.		1. Check the battery communication connector. 2. Replace the plug DC. 3. Replace the controller assembly. 4. Replace the battery.

*Restoration Max Level:

Level	
0	If the system detects this error, the power assist mode will be down or turns to off. But when the system is restored to normal, the power assist mode will return to normal and the error indicator will be unshown immediately.
1	If the system detects this error prescribed number of times, the power assist mode turns to off and the error indicator is displayed on the display unit. But they can return to normal, if the system will not detect any errors when the power is cycled.
2	If the system detects this error prescribed number of times, the power assist mode turns to off, and the error indicator is displayed on the display unit. They can not return to normal, even if the power is cycled.

Speed sensor set

Speed sensor inspection

1. Pickup
   - Check that the pickup is installed at the specified location on the bike.
   - Check that the pickup is not damaged.

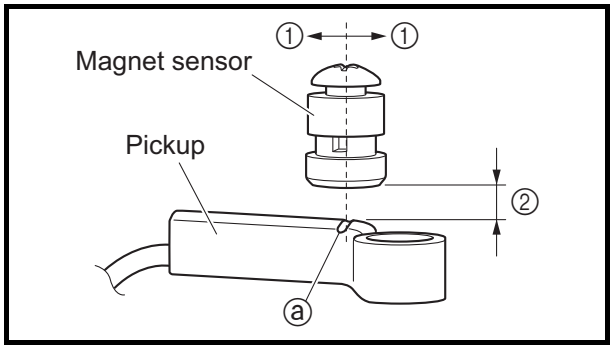

2. Magnet sensor

a. Check that the magnet sensor is not damaged.

b. Check that no metallic foreign material has adhered to the magnet sensor.

c. Check that the magnetic surface of the magnet sensor is facing the sensing point on the pickup.

d. Install the magnet sensor to match the center of the magnet sensor and the cutout point ⓐ of the pickup.

e. Check that the center location of the magnet sensor ① is within specification.

Center location of the magnet sensor ①
5 mm

f. Check that the gap ② between the pickup and the magnet sensor is within specification.

Gap (between the pickup and magnet sensor) ②
10 mm or less

Drive Unit

Drive axle, Motor

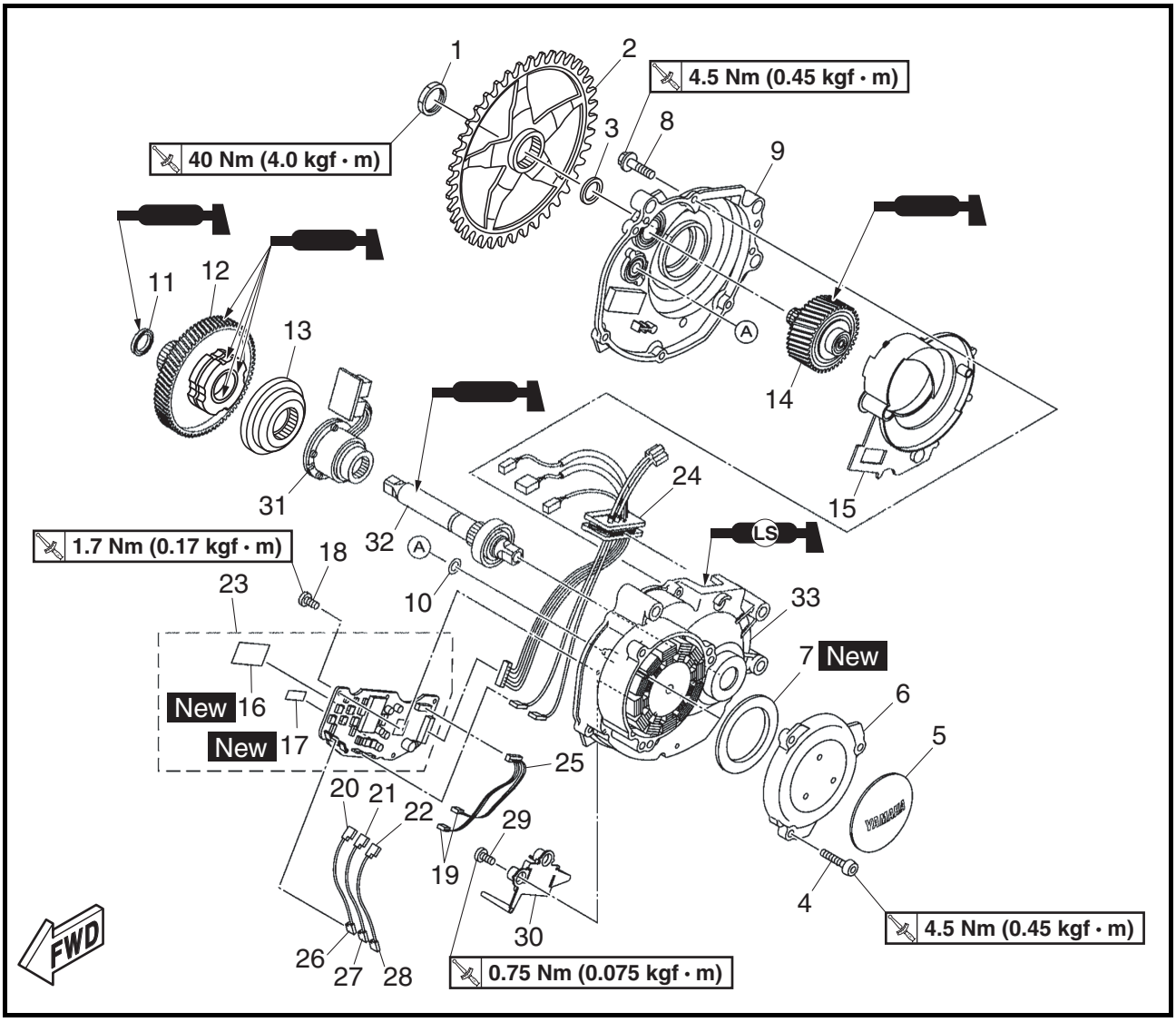

Order	Job/Part	Q'ty	Remarks
	Removal of the Drive axle, Motor		Follow the work procedures for removal.
	Drive Unit assembly		
1	Lock nut (Left-hand screw)	1	
2	Drive sprocket	1	
3	Spacer	1	
4	Button head bolt	3	
5	Cover assembly	1	
6	Stator cover	1	
7	Rubber damper	1	
8	Flanged bolt	6	
9	Housing complete	1	
10	Plate washer	1	

* The actual lead wire may differ with the variety of Drive Unit from the pictures shown.

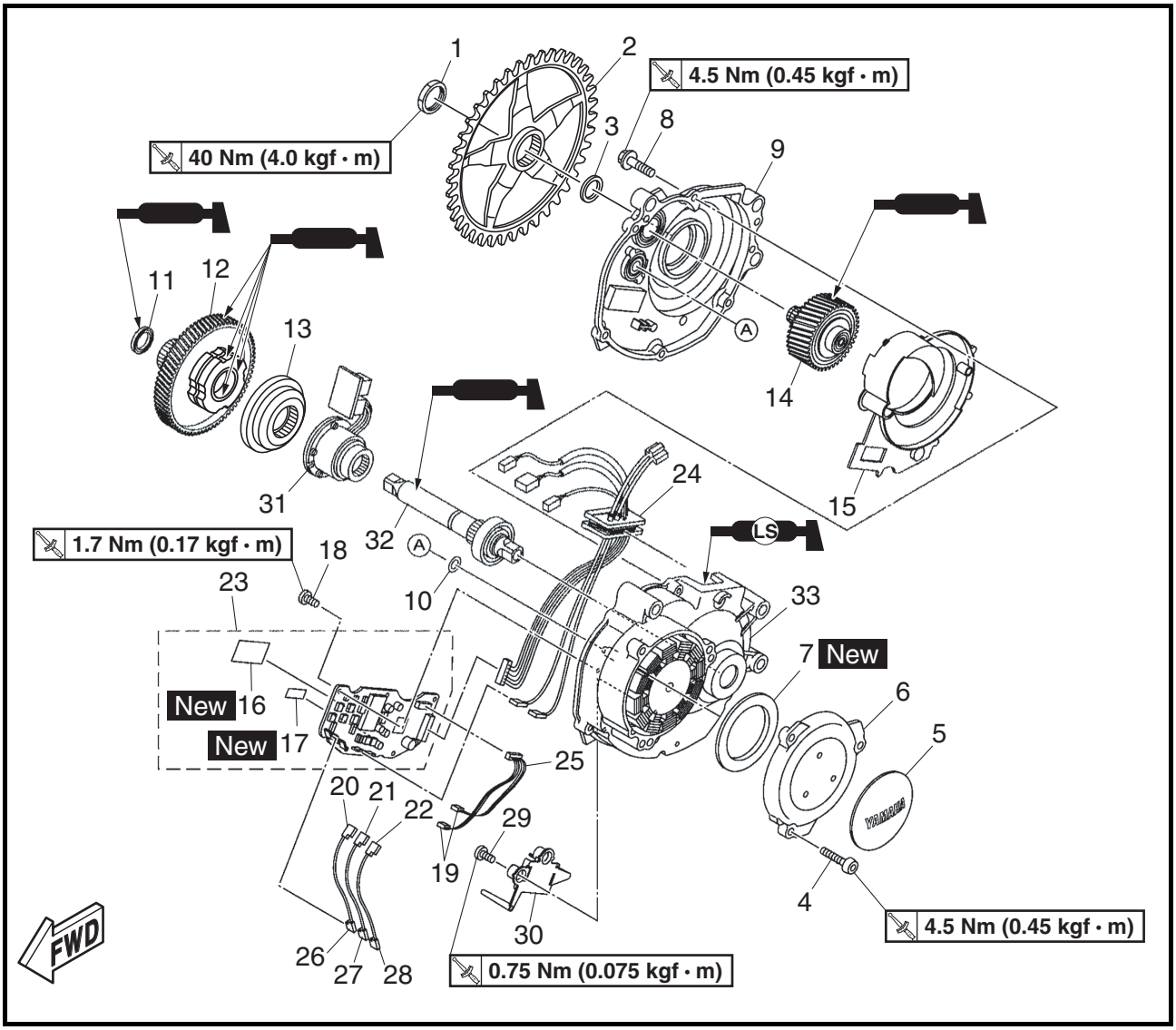

Order	Job/Part	Q'ty	Remarks
11	Oil seal	1	
12	Clutch boss assembly	1	
13	One-way outer boss	1	
14	Driven gear assembly	1	
15	Gear cover	1	
16	Heat-dissipating sheet	1	
17	Heat-dissipating sheet	1	
18	Tapping screw	5	
19	Wire lead 1 couplers	2	Disconnect.
20	Wire lead 3 couplers	1	Disconnect.
21	Wire lead 4 couplers	1	Disconnect.
22	Wire lead 5 couplers	1	Disconnect.

* The actual lead wire may differ with the variety of Drive Unit from the pictures shown.

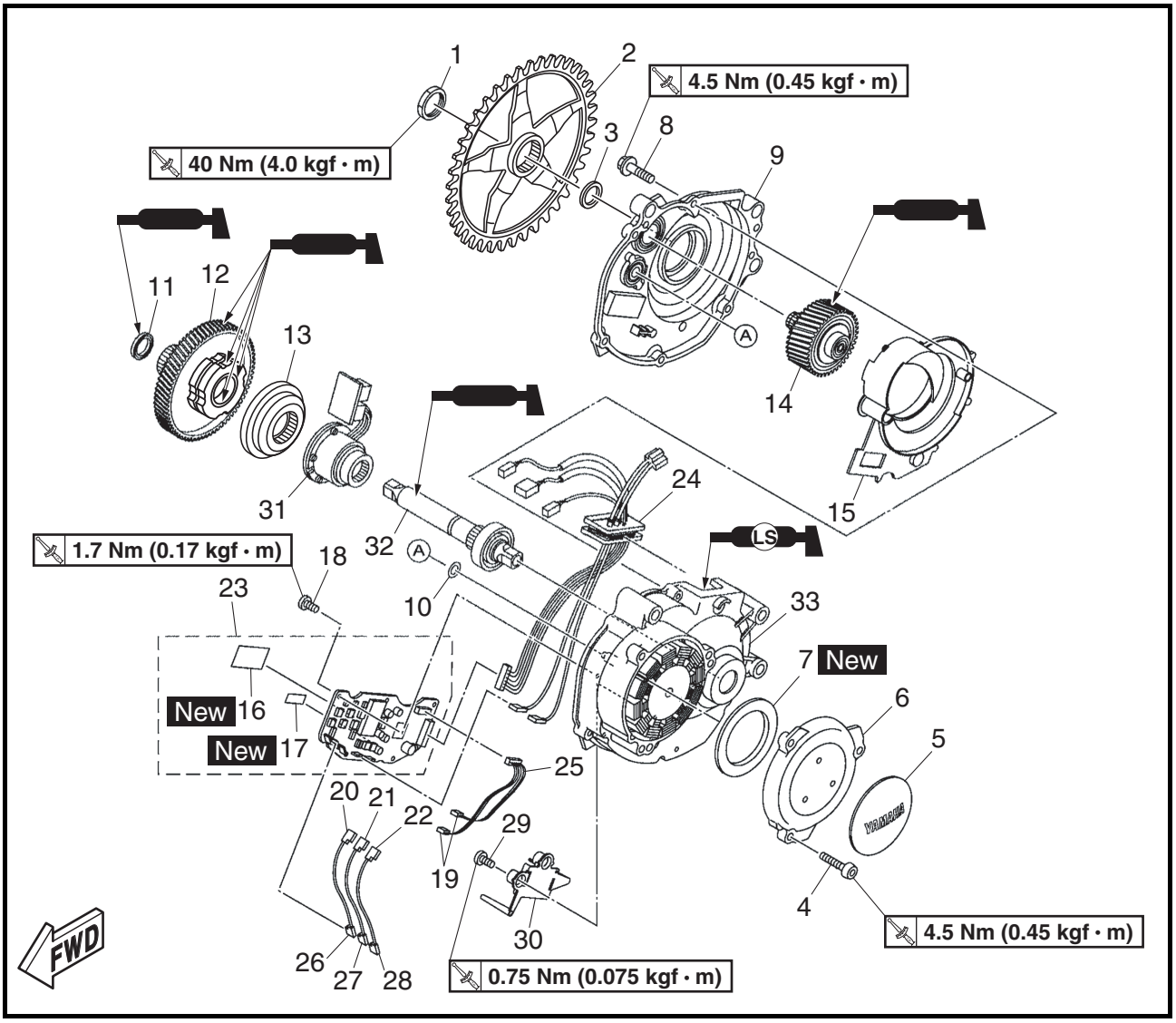

Order	Job/Part	Q'ty	Remarks
23	Controller assembly	1	**NOTICE** • **Do not touch the circuit board with greasy or dirty fingers.** • **Do not drop the circuit board or subject it to impact.**
24	Wire lead 2	1	
25	Wire lead 1	1	
26	Wire lead 3	1	
27	Wire lead 4	1	
28	Wire lead 5	1	
29	Tapping screw	2	
30	Holder	1	
31	Torque sensor assembly	1	

* The actual lead wire may differ with the variety of Drive Unit from the pictures shown.

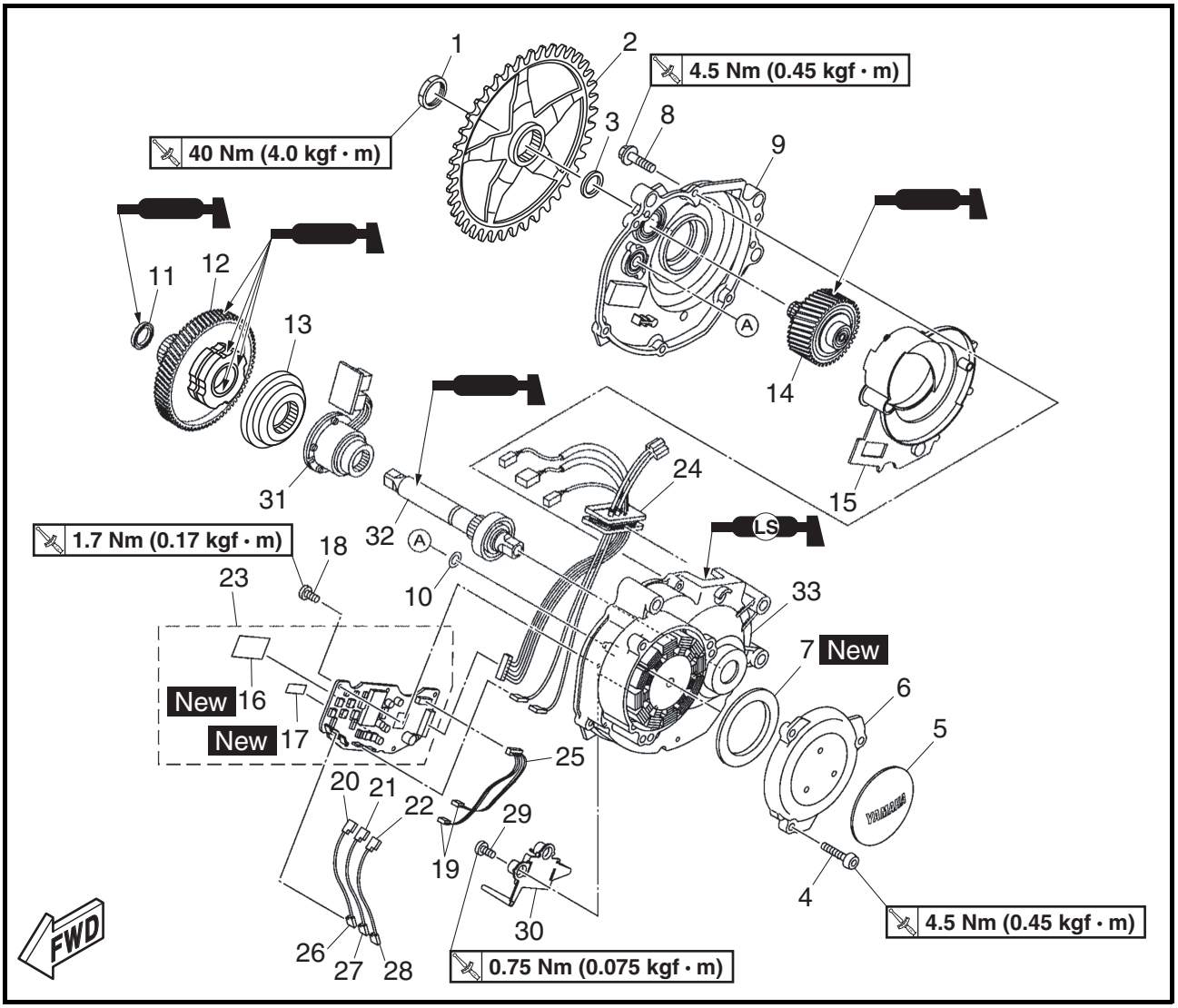

Order	Job/Part	Q'ty	Remarks
32	Drive axle	1	
33	Motor complete	1	
			Reverse the removal process for installation.

* The actual lead wire may differ with the variety of Drive Unit from the pictures shown.

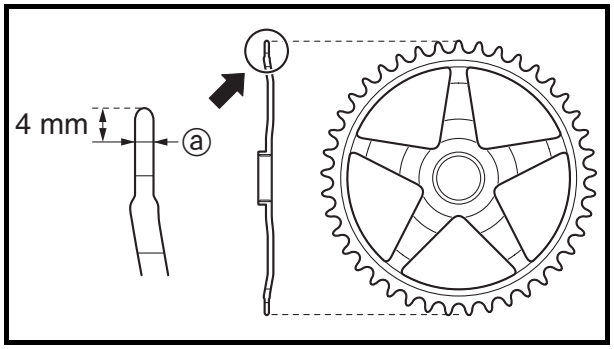

Checking the Drive Sprocket (Only for rear derailleur model)

1. Measure:
   - Drive sprocket teeth thickness ⓐ
     Out of specification → Replace the Drive sprocket, Motor sprocket and chain as a set.

Drive sprocket teeth thickness limit
1.3 mm

Removal of the Controller Assembly

1. Remove the following parts:
   - Lock nut (Left-hand screw)
   - Drive sprocket
   - Spacer
   - Flanged bolt

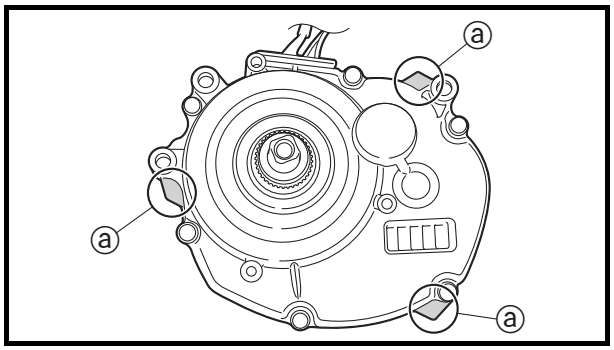

2. Separate the housing complete from the motor complete.

TIP

Separator ribs ⓐ are provided in 3 locations for separating the housing complete.

NOTICE

- **Take care not to scratch the mating surfaces of the housing complete and the motor complete with screwdrivers or other tools.**
- **Take care not to damage the boards of the controller assembly and the torque sensor assembly with tools.**

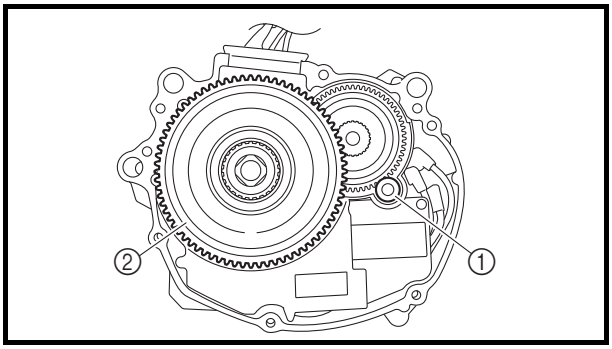

3. Remove the following parts:
   - Plate washer ①
   - Clutch boss assembly ②

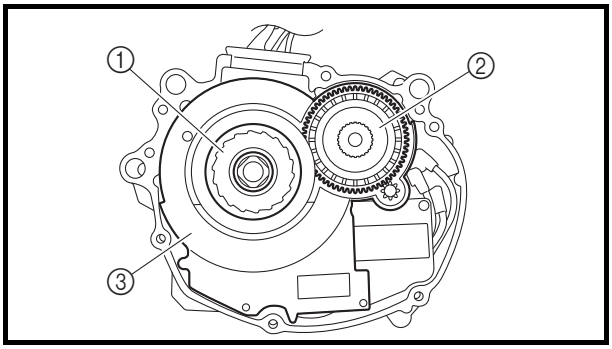

4. Remove the following parts:
   - One-way outer boss ①
   - Driven gear assembly ②
   - Gear cover ③

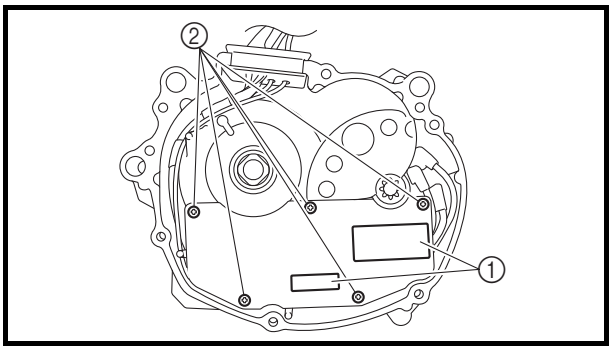

5. Remove the following parts:
   - Heat-dissipating sheet ①
   - Tapping screw ②

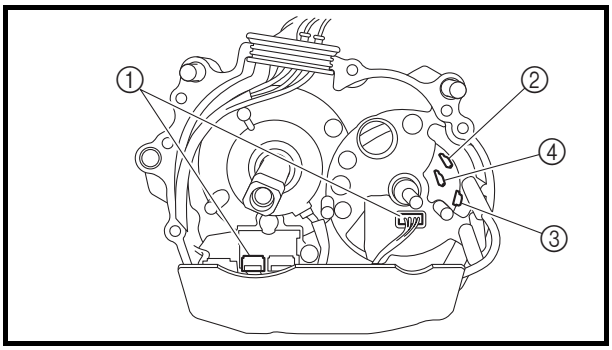

6. Disconnect the following couplers:
   - Wire lead 1 couplers ①
   - Wire lead 3 coupler ②
   - Wire lead 4 coupler ③
   - Wire lead 5 coupler ④

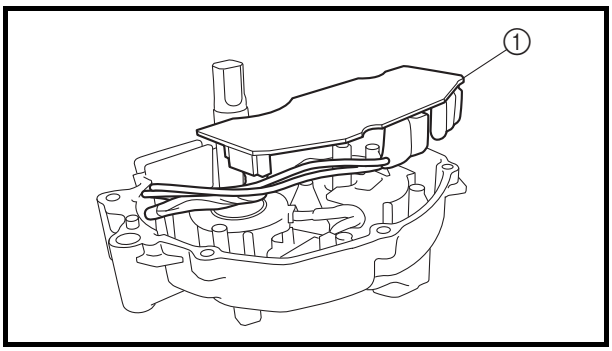

7. Remove the following part:
   - Controller assembly ①

NOTICE

- **Do not touch the board of the controller assembly with greasy or dirty fingers.**
- **Do not drop the board or subject it to impact.**

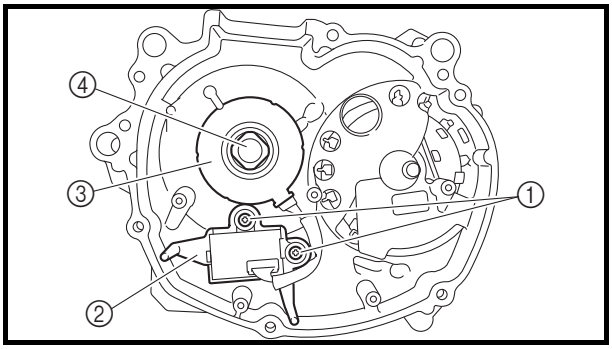

Removal of the Torque sensor assembly and Drive axle.

1. Remove the following parts:
   - Tapping screw ①
   - Holder ②
   - Torque sensor assembly ③
   - Drive axle ④

NOTICE

Do not disassemble the torque sensor assembly because it cannot be readjusted.

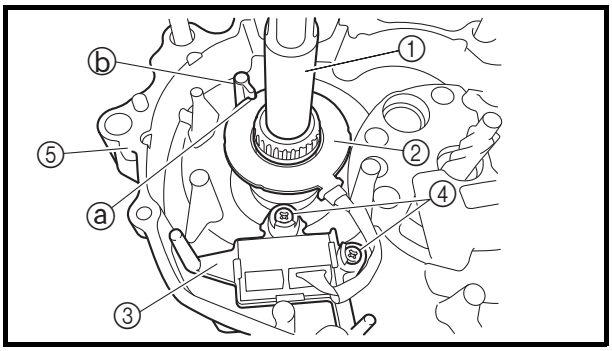

Installation of the Drive axle and Controller assembly

1. Install the following parts:
   - Drive axle ①
   - Torque sensor assembly ②
   - Holder ③
   - Tapping screw ④ **0.75 Nm (0.075kgf·m)**

TIP

When installing the drive axle, align the cut out parts ⓐ of the torque sensor assembly ② with the projections ⓑ on the motor complete ⑤.

Installation of the Controller assembly

1. Install the following parts and connect the following couplers:
   - Controller assembly
   - Wire lead 5 coupler
   - Wire lead 4 coupler
   - Wire lead 3 coupler
   - Wire lead 1 coupler
   - Tapping screw **1.7 Nm (0.17kgf·m)**

NOTICE

The tapping screw of the controller assembly must be installed because it also serves as a ground.

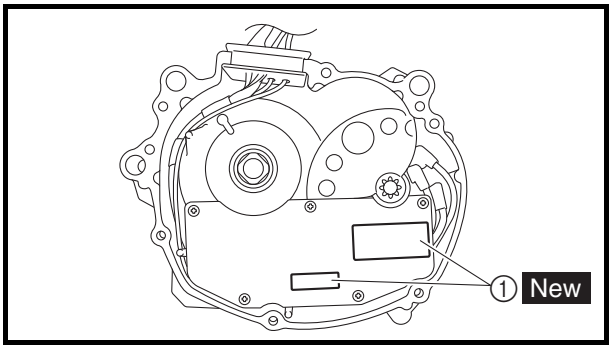

2. Install the following part:
   - Heat-dissipating sheet ①

NOTICE

Thermal protection may be compromised by an ill-fitting heat-dissipating sheet, so be sure to replace the heat-dissipating sheet with a new one when the assembly is disassembled.

TIP

- Put the heat-dissipating sheet to designated location of controller.
- The heat-dissipating sheet should not be stretched more than 10% beyond its original dimensions.

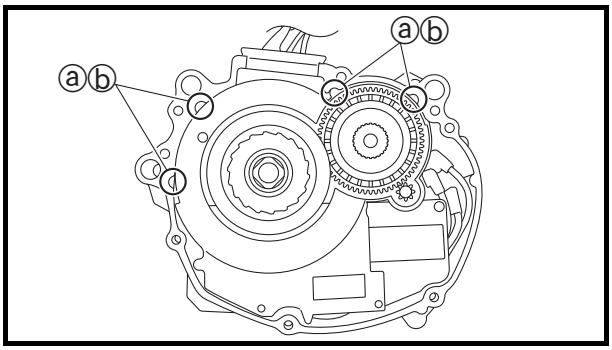

3. Install the following parts:
   - Gear cover
   - Driven gear assembly
   - One-way outer boss
   - Clutch boss assembly
   - Plate washer

TIP

When installing the gear cover, align the projections ⓐ of the gear cover with the cut out parts ⓑ of the motor complete.

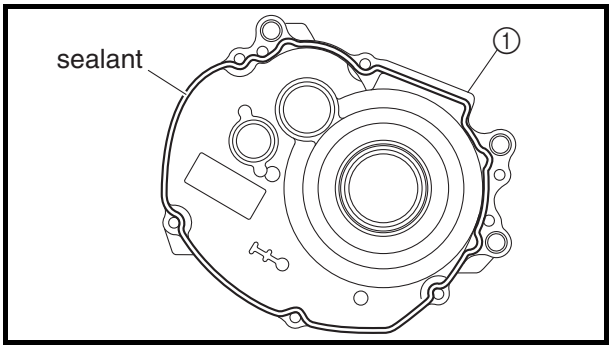

Installation of the Bearing Housing

1. Apply Three Bond 1215® to the following parts:
   - Housing complete ①
     Apply a continuous 2 to 3 mm thick coating as shown in the drawing (area indicated by dark line).

	Three Bond 1215®

TIP

- Before applying the sealant, thoroughly clean all the mating surface of housing complete and motor complete.
- If there is any oil or grease on the housing complete or motor complete mating surfaces, wipe the surfaces clean and then apply sealant.
- Within 5 min. after applying the sealant, join the left and right halves together.

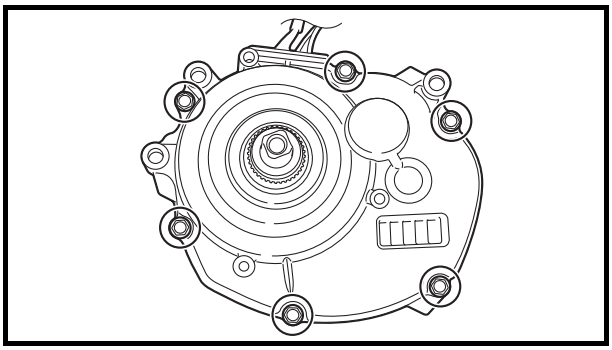

2. Install the following part:
   - Housing complete **4.5 Nm (0.45 kgf·m)**

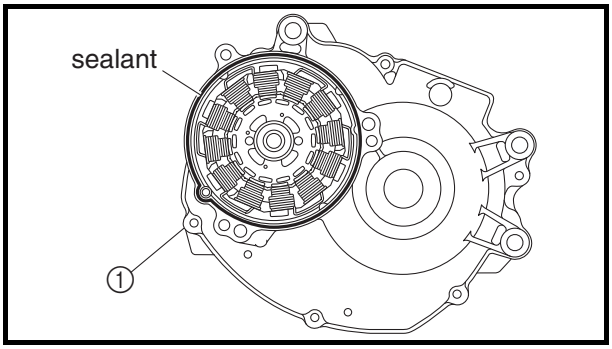

Installation of the Stator Cover

1. Apply Three Bond 1215® to the following parts:
   - Motor complete ①
     Apply a continuous 2 to 3 mm thick coating as shown in the drawing (area indicated by dark line).

	Three Bond 1215®

TIP

- Before applying the sealant, thoroughly clean all the mating surface of stator cover and motor complete.
- Within 5 min. after applying the sealant, join the left and right halves together.

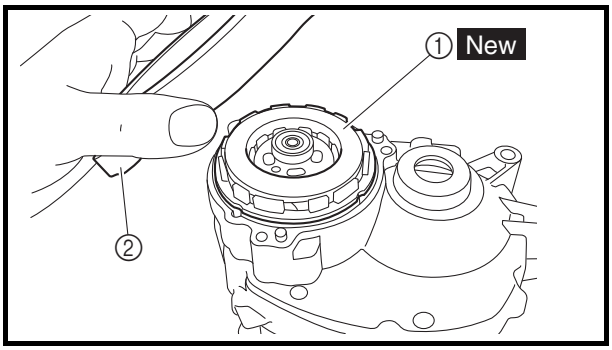

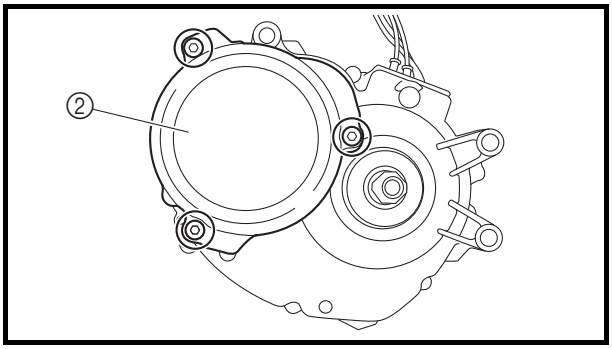

2. Install the following part:
   - Damper rubber ①
   - Stator cover ② — **4.5 Nm (0.45 kgf·m)**

TIP

- When assembling the stator cover, hand tighten the three flanged bolts and then tighten them evenly.
- Install the Damper rubber ① inside the stator cover.
- Be sure to replace the Damper rubber ① with a new one when the assembly is disassembled.

Service Data

Tightening Torque

Unit: Nm kgf·m in ( )

Tightening locations	Screw diameter	Q'ty	Tightening torque	Notes
Drive sprocket lock nut	M27	1	40 (4.0)	Left hand screw
Stator cover installation	M5	3	4.5 (0.45)	
Motor assembly and bearing housing	M5	6	4.5 (0.45)	
Circuit board installation	M3	5	1.7 (0.17)	Self-tapping screw
Holder installation	M3	2	0.75 (0.075)	Self-tapping screw
LCD type display holder	M3	2	0.3 (0.03)	

Other, general tightening torques

The tightening torques of bolts and nuts other than those with tightening force for specified locations is determined by the screw diameter (width between two surfaces) and the pitch.

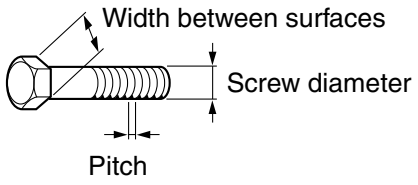

Screw diameter (width between two surfaces) × pitch	Tightening torque
M4 (7 mm) × P0.7	1.5 to 2.5 Nm (0.15 to 0.25 kgf·m)
M5 (8 mm) × P0.8	3 to 4.5 Nm (0.3 to 0.45 kgf·m)
M6 (10 mm) × P1.0	5 to 8 Nm (0.5 to 0.8 kgf·m)
M8 (12 mm) × P1.25	12 to 19 Nm (1.2 to 1.9 kgf·m)

Lubricants, areas to apply sealant and specified types

Where to apply	Types of oils, grease, and sealants
All oil seal lips	Lithium grease made from synthetic hydrocarbon oil and synthetic ester oil (MULTEMP AC-N®)
Pawl kicks	Lithium grease made from synthetic hydrocarbon oil and synthetic ester oil (MULTEMP AC-N®)
Drive axle O-rings	Lithium-soap-based grease
Interior of torque sensor bushing	Lithium grease made from synthetic hydrocarbon oil and synthetic ester oil (MULTEMP AC-N®)
Spline of torque sensor	Lithium grease made from synthetic hydrocarbon oil and synthetic ester oil (MULTEMP AC-N®)
Interiors of the drive axle assembly and the one-way inner/outer bosses	Lithium grease made from synthetic hydrocarbon oil and synthetic ester oil (MULTEMP AC-N®)
All driven gear surfaces	Lithium grease made from synthetic hydrocarbon oil and synthetic ester oil (MULTEMP AC-N®)
Motor assembly's surface which contact to the gromet of power lead wire.	Lithium-soap-based grease
Mating surfaces between motor assembly and bearing housing	Three Bond 1215®

Cable, Wire, and Pipe routing diagram

① Wire lead 2
② Torque sensor plate
③ Wire lead 3 (Yellow)
④ Wire lead 4 (Blue)
⑤ Wire lead 5 (White)
⑥ Controller assembly
⑦ Heat-dissipating sheet
⑧ Wire lead 1
⑨ Wire lead 1 couplers 1
⑩ Wire lead 1 couplers 2
⑪ Crank sensor

A Torque sensor positioner.
B Apply the heat-dissipating sheet so that it does not protrude from the heat sink plate. The heat-dissipating sheet should not be stretched beyond 10% of its original dimensions.
C Route the encoder lead wires through the outer side of holder projections as shown in the drawing.

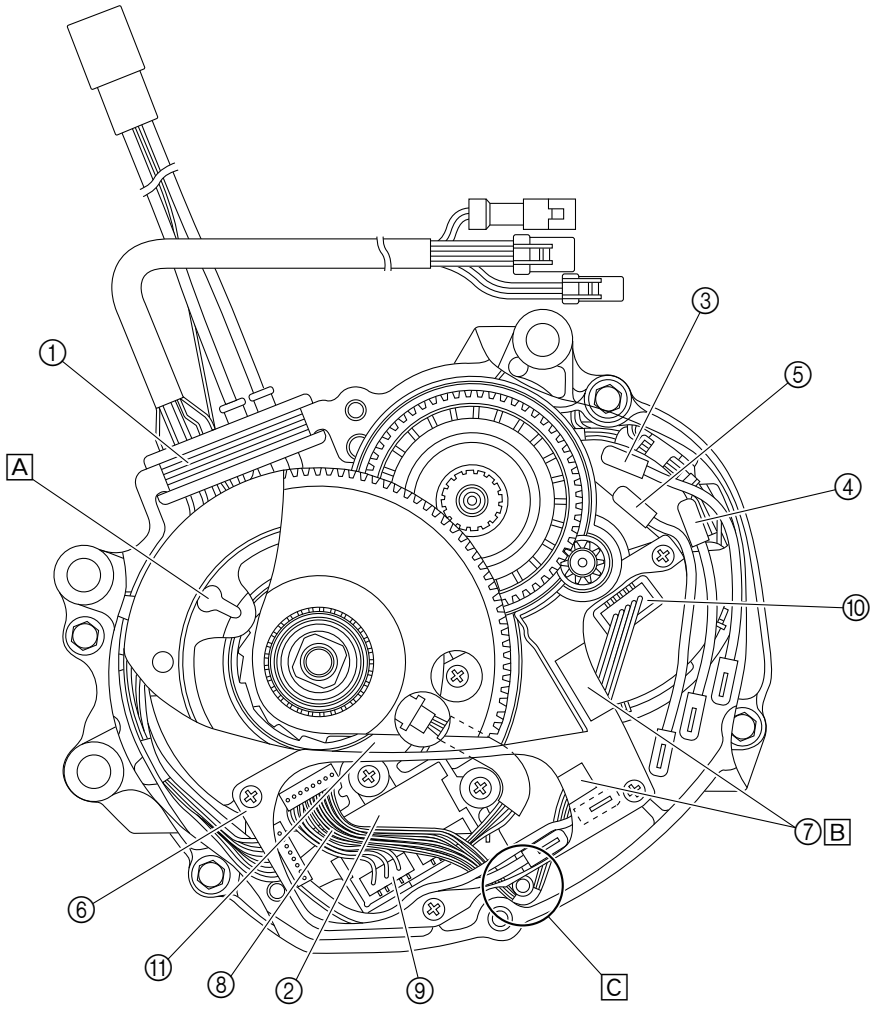

*The actual lead wire may differ with the variety of Drive Unit from the pictures shown.

Troubleshooting

Symptom	Check point/method	Possible cause/check	Part replacement/action
The pedal feels heavy.	Is the air pressure in the tires normal?	Check for appropriate air pressure. Check for punctures.	Repair puncture, replace tube.
	Is the gear-shifting working smoothly?	Check the gear shifting system.	Replace the gear shifting system.
	Is it being driven up a long slope in the summer, or carrying a heavy load?	This is due to the temperature rising in the battery pack or the Drive Unit assembly, and is not a malfunction.	The assist power is restored once the temperature of the battery pack or the Drive Unit assembly drops.
	Is the ambient temperature low (around 10°C or below)?	Check the ambient temperature.	During the winter, store the battery pack indoors before use.
The e-bike systems activates and cuts off during driving.	Is the battery pack securely locked?	Check the battery pack lock.	Check if the battery pack is securely locked. Inspect the battery pack terminals and wiring for loose connection.
The cruising distance is short.	Has the battery pack been sufficiently charged?		Charge until full.
	Is it being used in a low-temperature environment?	Check the ambient temperature.	This will be restored when the ambient temperature warms up.
	Is the battery pack degrading?	Check the battery pack's Total number of battery charging cycles , actual capacity.	Replace the battery pack.
The 3 assist mode lamps, the "%" lamp, the "Km" lamp, and the "km/h" lamp are flashing at the same time, and "Er" is displaying on the LED type display unit. 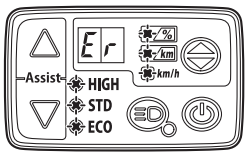 	Check the error according to the display on the display unit when the error occurred. (See Chapter 2 "How communication errors are displayed".)	Communication error. Check the "List of error codes and corresponding power assist operations".	Replace parts according to "List of error codes and corresponding power assist operations".
All segments of the assist mode display and battery capacity indicator are flashing at the same time, and "Er" is displaying on the speedometer section of the LCD type display unit. 			

Symptom	Check point/method	Possible cause/check	Part replacement/action
The 3 assist mode lamps, the “%” lamp, the “km” lamp, and the “km/h” lamp are flashing alternately, and “Er” is displaying on the LED type display unit. 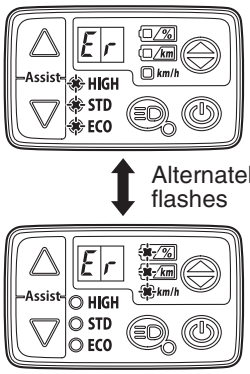 	Check the error log according to the display on the display unit when the error occurred. (See Chapter 2 “How Drive Unit malfunctions are displayed”.)	Drive Unit assembly error. Check “List of error codes and corresponding power assist operations”.	Replace parts according to “List of error codes and corresponding power assist operations”.
All segments of the assist mode display and battery capacity indicator are flashing alternately, and “Er” is displaying on the speedometer section of the LCD type display unit. 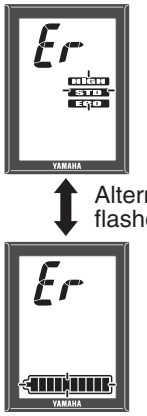 			
One of the assist mode lamps in the display unit ① is flashing. 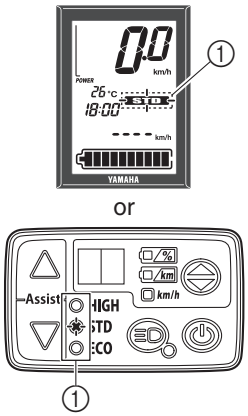 	Speed sensor set (See Chapter 2 “How speed sensor malfunctions are displayed”.)	A state persists where the speed sensor unit cannot detect the signal correctly.	Inspect the speed sensor set lead wires, pick up, and magnet sensor spoke type.

Symptom	Check point/method	Possible cause/check	Part replacement/action
Although the power to the display unit is turned on, all of the LED display of the LED type display unit turn on for 4 seconds, and then the power turns off automatically. 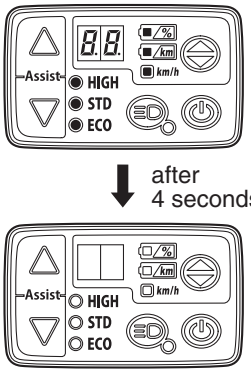 	Battery pack signal lead wires (See Chapter 2 “When the battery pack signal lead wire becomes disconnected”.)	Disconnection of signal lead wires in the battery pack.	Replace the lead wires for the DC plug or the power supply.
Although the power to the display unit is turned on, all segments of the LCD type display unit turn on for 4 seconds, and then the power turns off automatically. 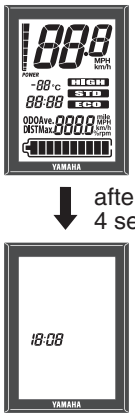 			
Charged the battery pack, but the residual battery capacity display lamp on the display unit does not show [FL].	Was the charging started immediately after driving, or when the battery pack temperature was high?		Recharge the battery in a location where the temperature is suitable for charging (0 to 45°C).
All four residual residual battery capacity display lamp on the battery pack are slow flashing simultaneously while charging the battery pack.	This is not a malfunction.	On standby for charging.	The charging will start once the internal temperature of the battery pack is within the 0 to 45°C range.
When pressing the battery capacity indicator button on the battery pack, all four battery capacity indicator lamps flash slowly at the same time.	This is not a malfunction.	See chapter 2 “Temperature protection function”.	The battery pack automatically recovers when the battery pack’s internal temperature returns to the allowable temperature for charging.

Symptom	Check point/method	Possible cause/check	Part replacement/action
When pressing the battery capacity indicator button on the battery pack, lamps [1]/[3] and [2]/[4] or [1]/[2] and [3]/[4] turn on alternately.	Hold down the battery capacity indicator button on the battery pack for 10 seconds. (See Chapter 2 “Error diagnosis mode”.)	(See Chapter 2 “Battery pack/battery charger diagnosis items table”.)	Replace the parts according to “Battery pack/battery charger diagnosis items table”.
The battery capacity indicator lamps [1] and [4] on the battery pack flash simultaneously.	Hold down the battery capacity indicator button on the battery pack for 10 seconds. (See Chapter 2 “Battery pack protection function diagnosis mode”.)	(See Chapter 2 “Battery pack/battery charger diagnosis items table”.)	Replace the battery pack.
After disconnecting the charging plug on the battery charger from the battery pack, the battery capacity indicator lamps continue to light.	Charging connector on the battery pack.	Charging connector and charging plug are wet.	Clean the charging connector and charging plug, and dry them.
Abnormal sound is produced from the Drive Unit assembly.	Assist driving	Abnormal sound is produced during assist driving.	Check for sprocket wear or stretched chain
		Abnormal sound is produced when the motor is operating.	Disassemble the Drive Unit. Inspect the driven gear. Replace the motor assembly.
	Turn the crank.	Turning the crank produces periodic abnormal sound.	Inspect the housing bearing. Inspect the bearing.
	Turn off the power for manual pedalling.	Stepping on the pedal produces abnormal sound and vibration (clicking).	Check the joints. If further tightening does not improve the problem, replace parts.

Yamaha X94 Series Service Manual
1st edition
Published October 2013
Unauthorized reproduction prohibited
Published by: Yamaha Motor Co., Ltd.

YAMAHA